TOMCAT®

PRO

Parts Manual (EN)

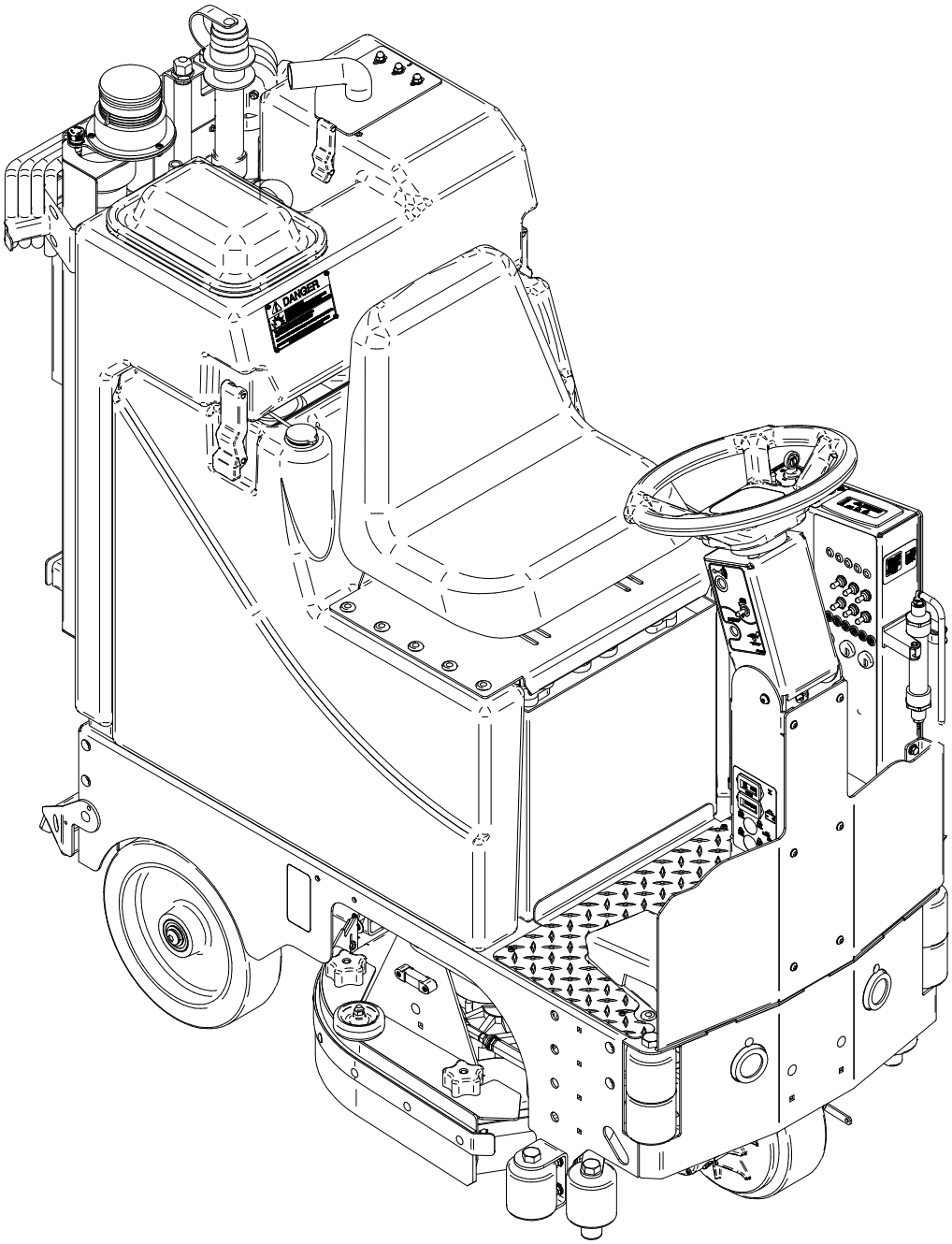

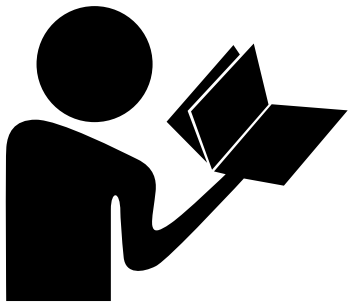

Read Operation Instructions before using the machine.

Read the Safety Messages before using the machine.

www.tomcatequip.com
1711 South Street
Racine, WI 53404 (USA)
(800) 450-9824 I (001) 262-681-6470
© 2020 RPS Corporation

V20.028
TC-PRO-ST-HD-P-EN

ST - 8'' Front Wheel Drive 4
HD - 10'' Front Wheel Drive.....6
Front Wheel and Side Rollers.....8
Attaching Decks.....9
Disk Shrouds 10
Disk Decks.....11
Cylindrical Decks 12
Cylindrical Wipers.....14
Cylindrical Doors 15
EDGE Decks 16
EDGE Deck Wipers 18
Squeegee Trail Arm - Standard 19
Attaching Squeegee Trail Arm, Bumper, & Axle 20
Squeegee Assembly.....21
Solution System.....22
ZERO3 System 23
Solution Tank 24
Recovery Tank.....25
Rear Options 26
Vacuum Motor Assembly 27
Attaching Tanks & Batteries.....28
Central Command 29
Central Command 30
Steering Column.....31
Attaching Steering Column & Central Command 32
28” Disk & 29'' Cylindrical Doors 33
26'' Disk & 25'' Cylindrical Doors 34
Common Wear Parts 35
Tank Stickers 37
Central Command Stickers.....38

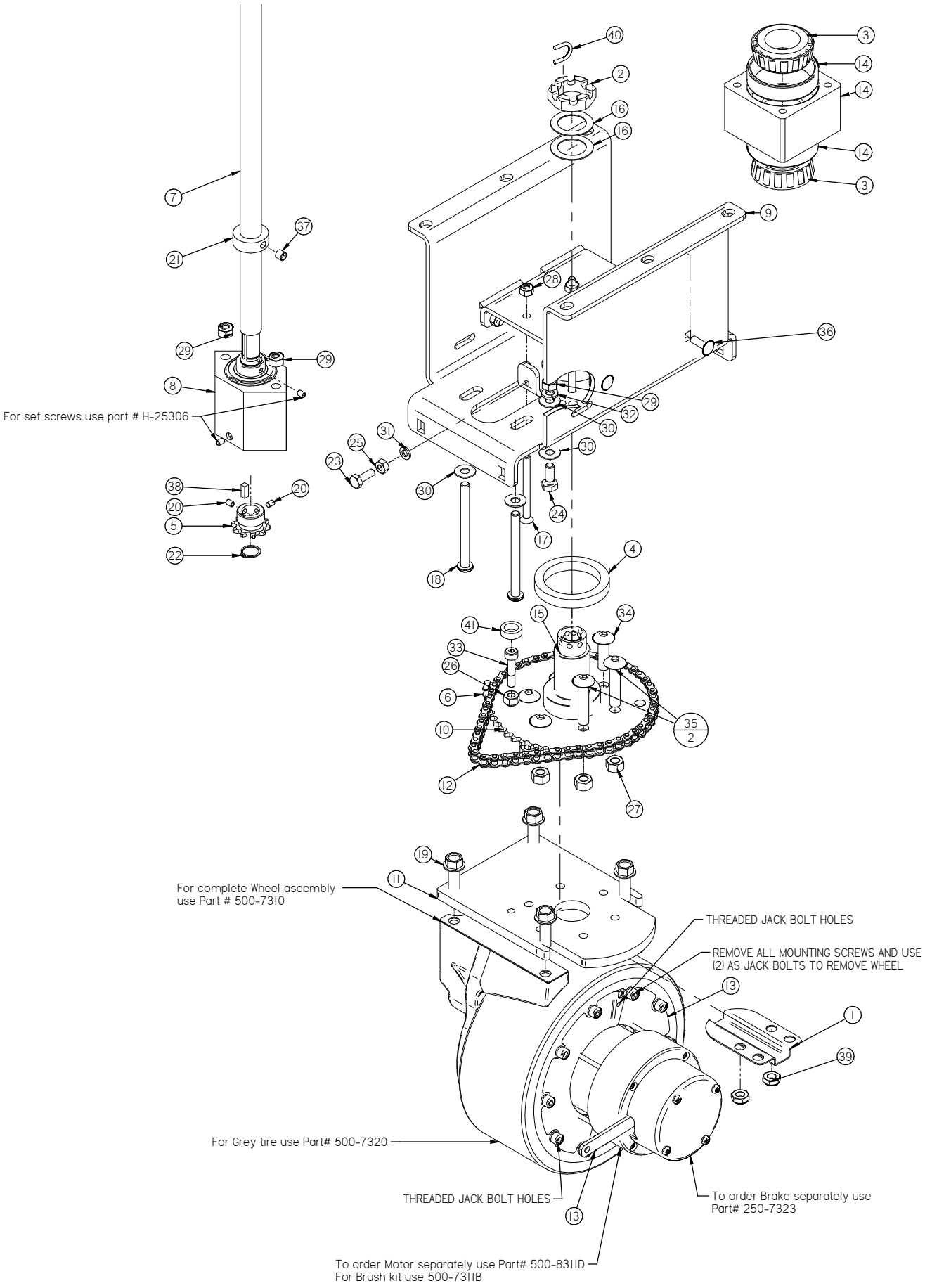
For set screws use part # H-25306
For complete Wheel aseembly use Part # 500-7310
THREADED JACK BOLT HOLES
REMOVE ALL MOUNTING SCREWS AND USE (2) AS JACK BOLTS TO REMOVE WHEEL
For Grey tire use Part# 500-7320
THREADED JACK BOLT HOLES
To order Brake separately use Part# 250-7323
To order Motor separately use Part# 500-8311D
For Brush kit use 500-7311B

Item	Part No.	Part Description	Qty.
1	250-7328	WIRE GUIDE	1
2	37-7321	SLOTTED NUT, 2.0 - 12	1
3	370-7317	TAPERED ROLLER BEARING	2
4	370-8374	BEARING SEAL	1
5	5-826	10 TOOTH SPROCKET 5/8 SHAFT	1
6	5-831	MASTER LINK	1
7	500-7121	STEERING SHAFT, LOWER 8 inch	1
8	500-7231A	BEARING W/HOUSING	1
9	500-7312	FRONT DRIVE DROP PLATE (8")	1
10	500-7314	48 TOOTH STEERING SPROCKET	1
11	500-7325	8 inch PIVOT PLATE	1
12	500-7327	48 TOOTH STEERING CHAIN	1
13	500-9557	DRIVE GUARD (8")	2
14	600-7230A	BEARING BLOCK ASSEMBLY	1
15	600-7332	STEERING SPINDLE	1
16	8-713	1 1/2" THRUST WASHER	2
17	H-0170132	FHP 1/4"- 20 X 2-3/4"	4
18	H-0171294	BHSCS 5/16-18 X 3.5	2
19	H-11115680	FB CASHD M10-1.5 X 30mm	4
20	H-25306	SSS CP #10-32 X 1/4"	2
21	H-33376	SHAFT COLLAR, 3/4" ID X 9/16 LG	1
22	H-68013	SNAPRING	1
23	H-70003	HCS 1/4"-20 X 3/4" SS	1
24	H-70053	HCS 5/16"- 18 X 3/4" SS	2
25	H-70710	HN 1/4"- 20 SS	1
26	H-70711	HN 5/16"- 18 SS	1
27	H-70712	HN 3/8"-16 SS	6
28	H-70860	NYLOK 1/4"- 20 SS	8
29	H-70861	NYLOK 5/16" - 18 SS	4
30	H-71015	FW 5/16 ID X 3/4 OD SS	6
31	H-71063	LW 1/4" SS	1
32	H-71065	LW 5/16" SS	2
33	H-73496	SHCS 5/16-18 X 1-1/4 SS	1
34	H-73816	BHSCS 3/8"- 16 X 1-1/4" SS	4
35	H-73818	BHSCS 3/8"- 16 X 1-3/4" S/S	2
36	H-74419	CB 1/4"- 20 X .75" SS	4
37	H-81983	5/16" X 1/4" KURL SET SCREW	1
38	H-K1432	3/16" X 1/2" KEY	1
39	H-NJ06C	JNYL 3/8- 16 SS	2
40	M-9381T24	S-HOOK	1
41	T-050R0025	CLEAR TUBING	1

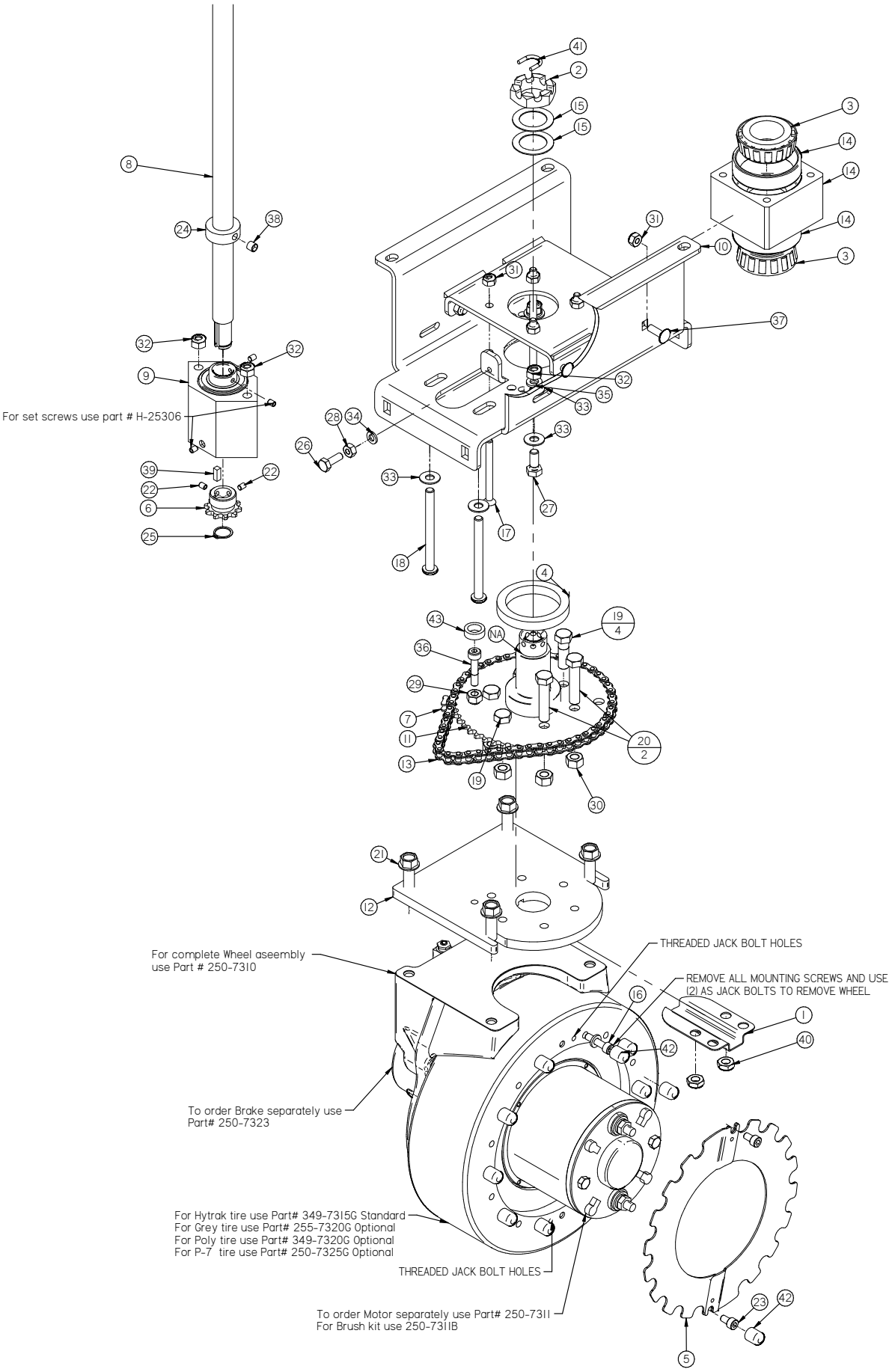
For set screws use part # H-25306
For complete Wheel aseembly use Part # 250-7310
THREADED JACK BOLT HOLES
REMOVE ALL MOUNTING SCREWS AND USE (2) AS JACK BOLTS TO REMOVE WHEEL
To order Brake separately use Part# 250-7323
For Hytrak tire use Part# 349-7315G Standard
For Grey tire use Part# 255-7320G Optional
For Poly tire use Part# 349-7320G Optional
For P-7 tire use Part# 250-7325G Optional
THREADED JACK BOLT HOLES
To order Motor separately use Part# 250-7311
For Brush kit use 250-7311B

Item	Part No.	Part Description	Qty.
1	250-7328	WIRE GUIDE	1
2	37-7321	SLOTTED NUT, 2.0 - 12	1
3	370-7317	TAPERED ROLLER BEARING	2
4	370-8374	BEARING SEAL	1
5	370-9557	DRIVE GUARD	2
6	5-826	10 TOOTH SPROCKET 5/8 SHAFT	1
7	5-831	MASTER LINK	1
8	500-7120	10" LOWER STEERING SHAFT	1
9	500-7231A	BEARING W/HOUSING	1
10	500-7311	FRONT DRIVE DROP PLATE (10")	1
11	500-7314	48 TOOTH STEERING SPROCKET	1
12	500-7326	10" PIVOT PLATE	1
13	500-7327	48 TOOTH STEERING CHAIN	1
14	600-7230A	BEARING BLOCK ASSEMBLY	1
15	8-713	1 1/2" THRUST WASHER	2
16	H-0135920	SHC M6-1 X 25 ZINK	10
17	H-0170132	FHP 1/4"- 20 X 2-3/4"	4
18	H-0171294	BHSCS 5/16-18 X 3.5	2
19	H-01728	HCS 3/8"- 24 X 1-1/4" SS	4
20	H-0172948	HCS 3/8"- 24 X 1-3/4" SS FULL THREADED	2
21	H-11115680	FB CASHD M10-1.5 X 30mm	4
22	H-25306	SSS CP #10-32 X 1/4"	2
23	H-2550010	SHCS M-6 X 10	2
24	H-33376	SHAFT COLLAR, 3/4" ID X 9/16 LG	1
25	H-68013	SNAPRING	1
26	H-70003	HCS 1/4"-20 X 3/4" SS	1
27	H-70053	HCS 5/16"- 18 X 3/4" SS	2
28	H-70710	HN 1/4"- 20 SS	1
29	H-70711	HN 5/16"- 18 SS	1
30	H-70712	HN 3/8"-16 SS	6
31	H-70860	NYLOK 1/4"- 20 SS	8
32	H-70861	NYLOK 5/16" - 18 SS	4
33	H-71015	FW 5/16 ID X 3/4 OD SS	6
34	H-71063	LW 1/4" SS	1
35	H-71065	LW 5/16" SS	2
36	H-73496	SHCS 5/16-18 X 1-1/4 SS	1
37	H-74419	CB 1/4"- 20 X .75" SS	4
38	H-81983	5/16" X 1/4" KURL SET SCREW	1
39	H-K1432	3/16" X 1/2" KEY	1
40	H-NJ06C	JNYL 3/8- 16 SS	2
41	M-9381T24	S-HOOK	1
42	M-9753K16	VINYL CAP, 1/2"	12
43	T-050R0025	CLEAR TUBING	1

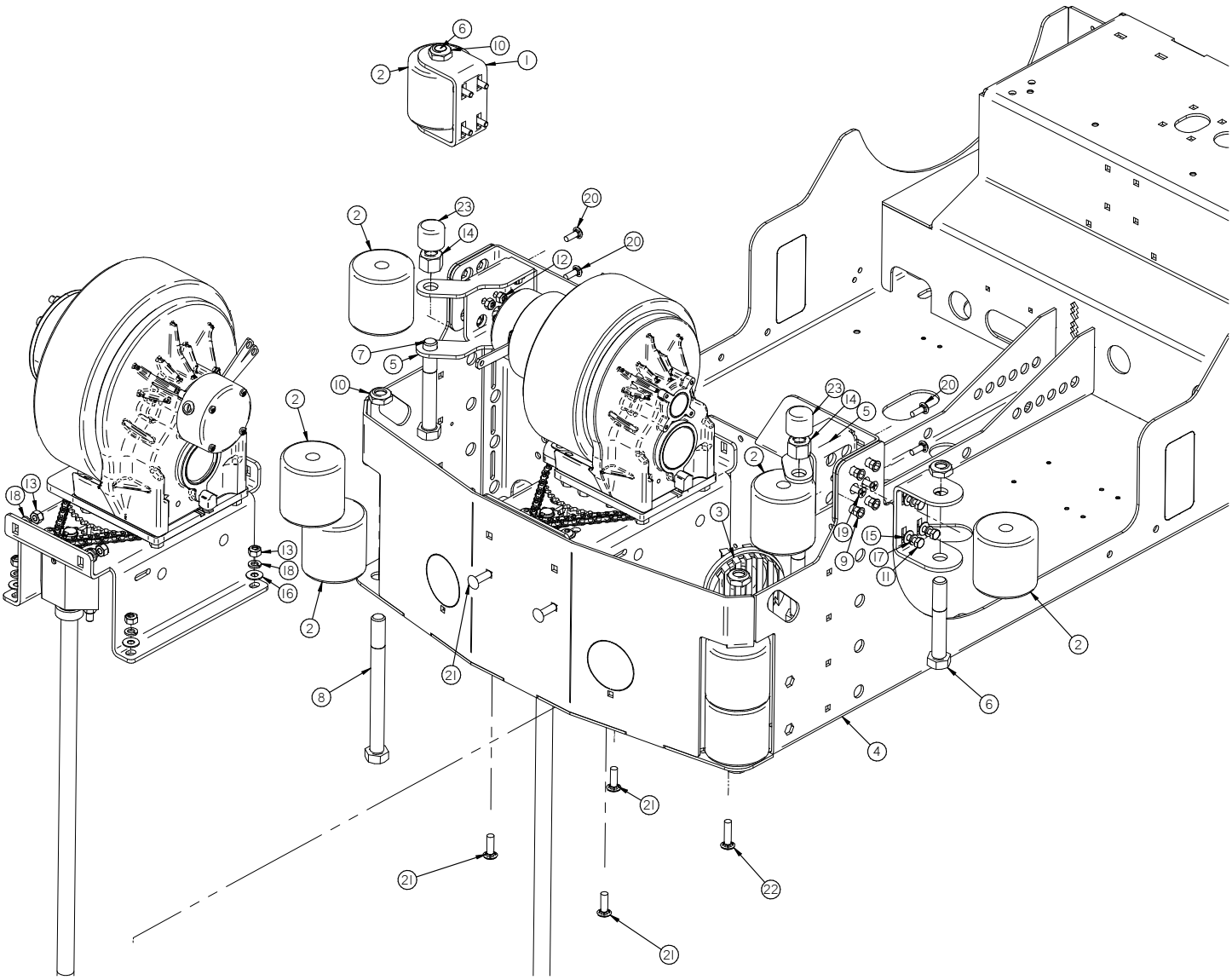

Item	Part No.	Part Description	Qty.
1	21-1126	ROLLER BRACKET	2
2	21-1127	ROLLER	8
3	370-2940	HORN	1
4	500-1000	MAIN FRAME	1
5	500-1028	LOWER ROLLER BRACKET	2
6	H-11319	HB 5/8"- 11 X 4"	2
7	H-11321	HB 5/8"- 11 X 4 1/2"	2
8	H-13327	HB 5/8"- 11 X 7"	2
9	H-250HCN	HCN 1/4"-20	6
10	H-37038	JNYL 5/8"- 11	4
11	H-70003	HCS 1/4"-20 X 3/4" SS	8
12	H-70860	NYLOK 1/4"- 20 SS	3
13	H-70861	NYLOK 5/16" - 18 SS	5
14	H-70866	NYL 5/8"- 11	2
15	H-71013	FW 1/4 ID X 5/8 OD SS	7
16	H-71015	FW 5/16 ID X 3/4 OD SS	3
17	H-71063	LW 1/4" SS	7
18	H-71065	LW 5/16" SS	5
19	H-72710	FHP 1/4"- 20 X 1" SS	3
20	H-74419	CB 1/4"- 20 X .75" SS	4
21	H-74430	CB 5/16"- 18 X 1" SS	5
22	H-74431	CB 5/16"- 18 X 1-1/4" SS	1
23	M-9267K47	15/16" HEX CAP	2

Attaching Decks

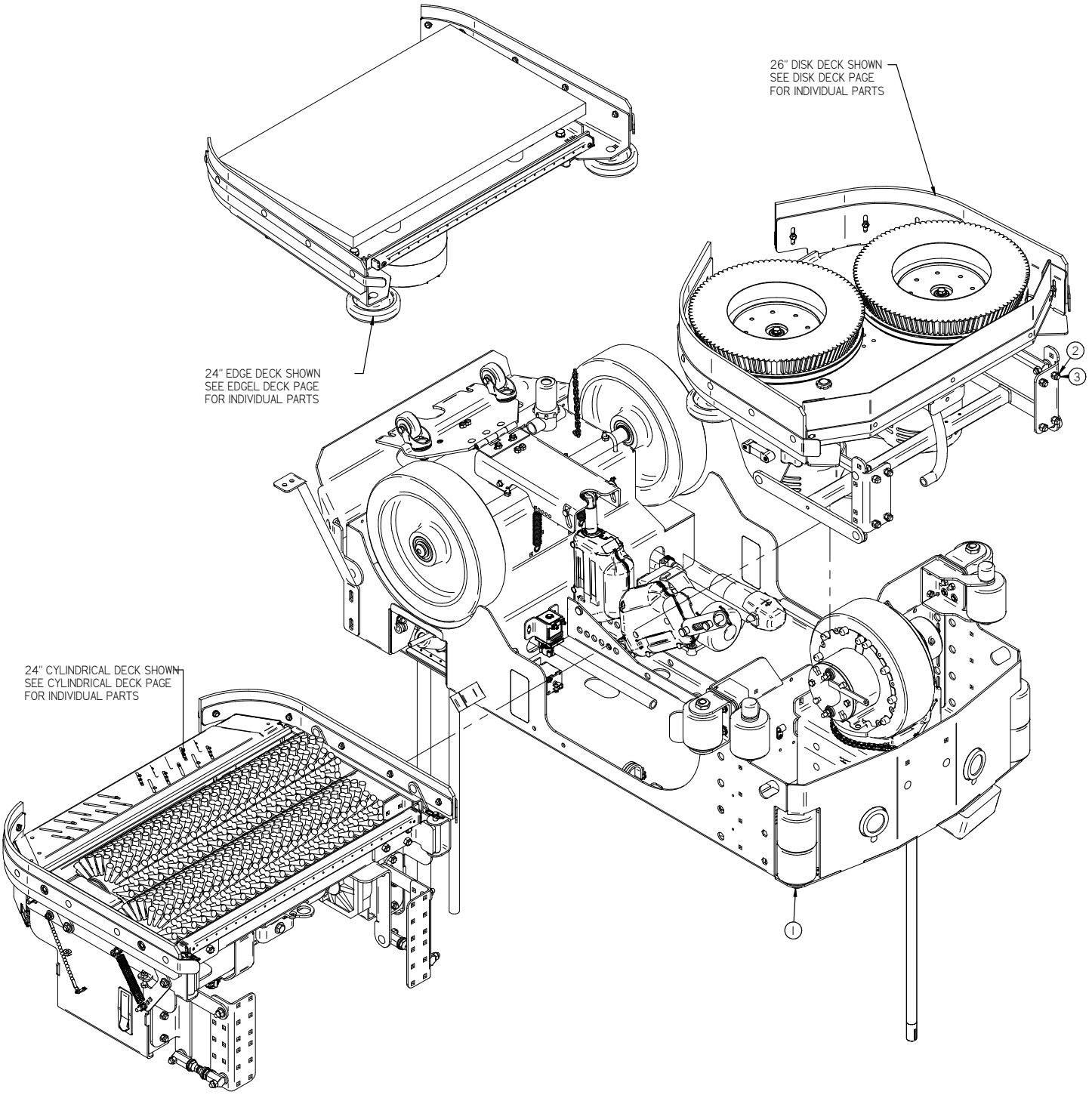

Item	Part No.	Part Description	Qty.
1	500-1000	MAIN FRAME	1
2	H-70861	NYLOK 5/16" - 18 SS	1
3	H-74429	CB 5/16"- 18 X 3/4" SS	1

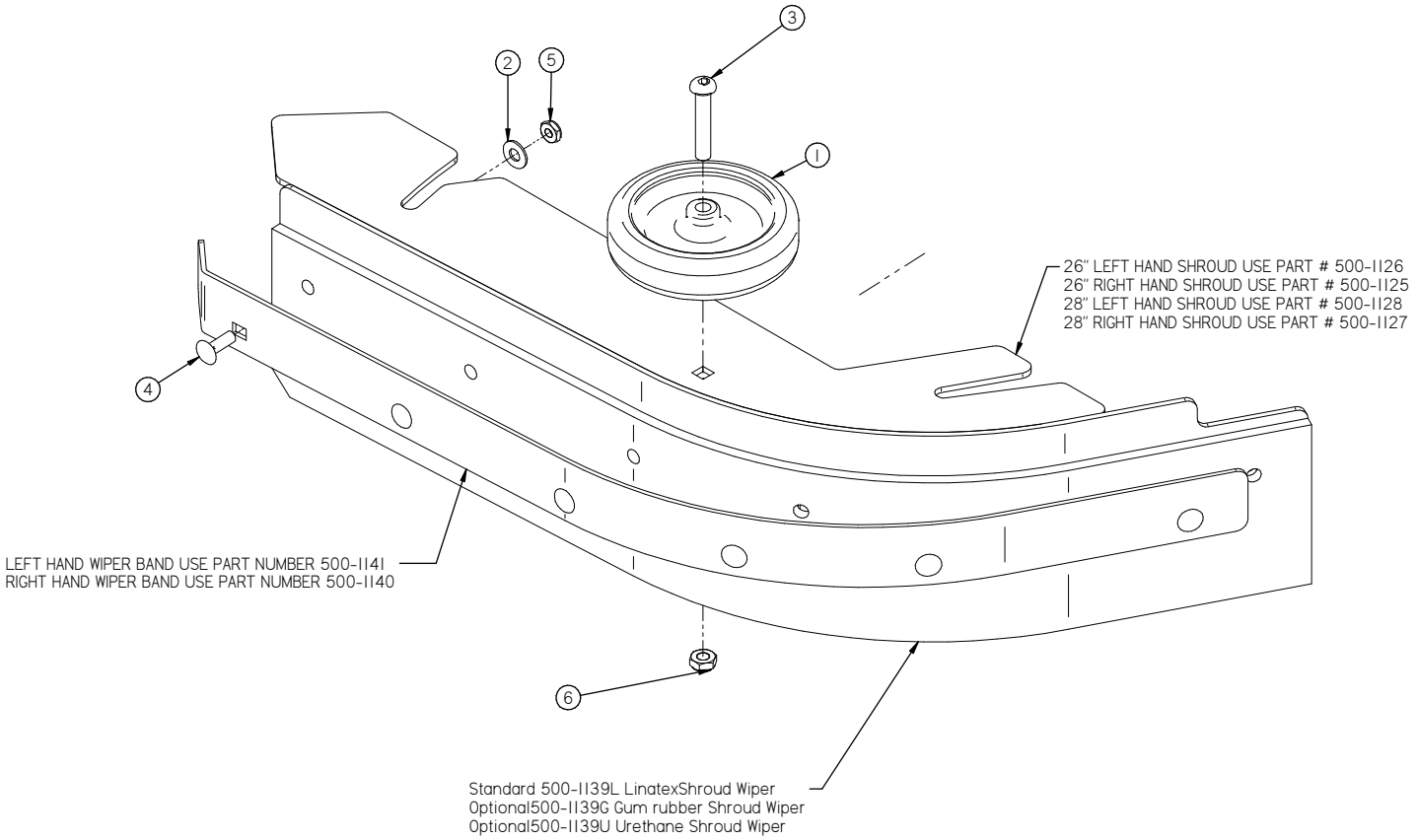

Item	Part No.	Part Description	Qty.
1	150-7600	4" SIDE WHEEL (GREY)	1
2	H-71013	FW 1/4 ID X 5/8 OD SS	6
3	H-73783	BHSCS 5/16-18 X 1.75	1
4	H-74419	CB 1/4"- 20 X .75" SS	6
5	H-NJ04C	JNYL 1/4" - 20 SS	6
6	H-NJ05C	JNYL 5/16"- 18 SS	1

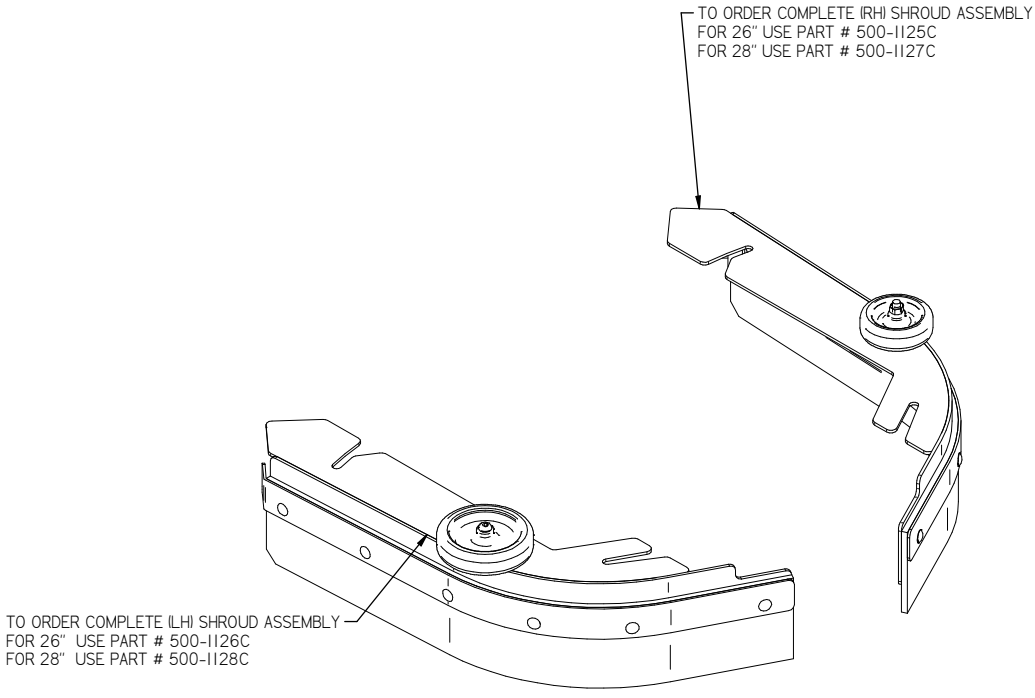

Disk Decks

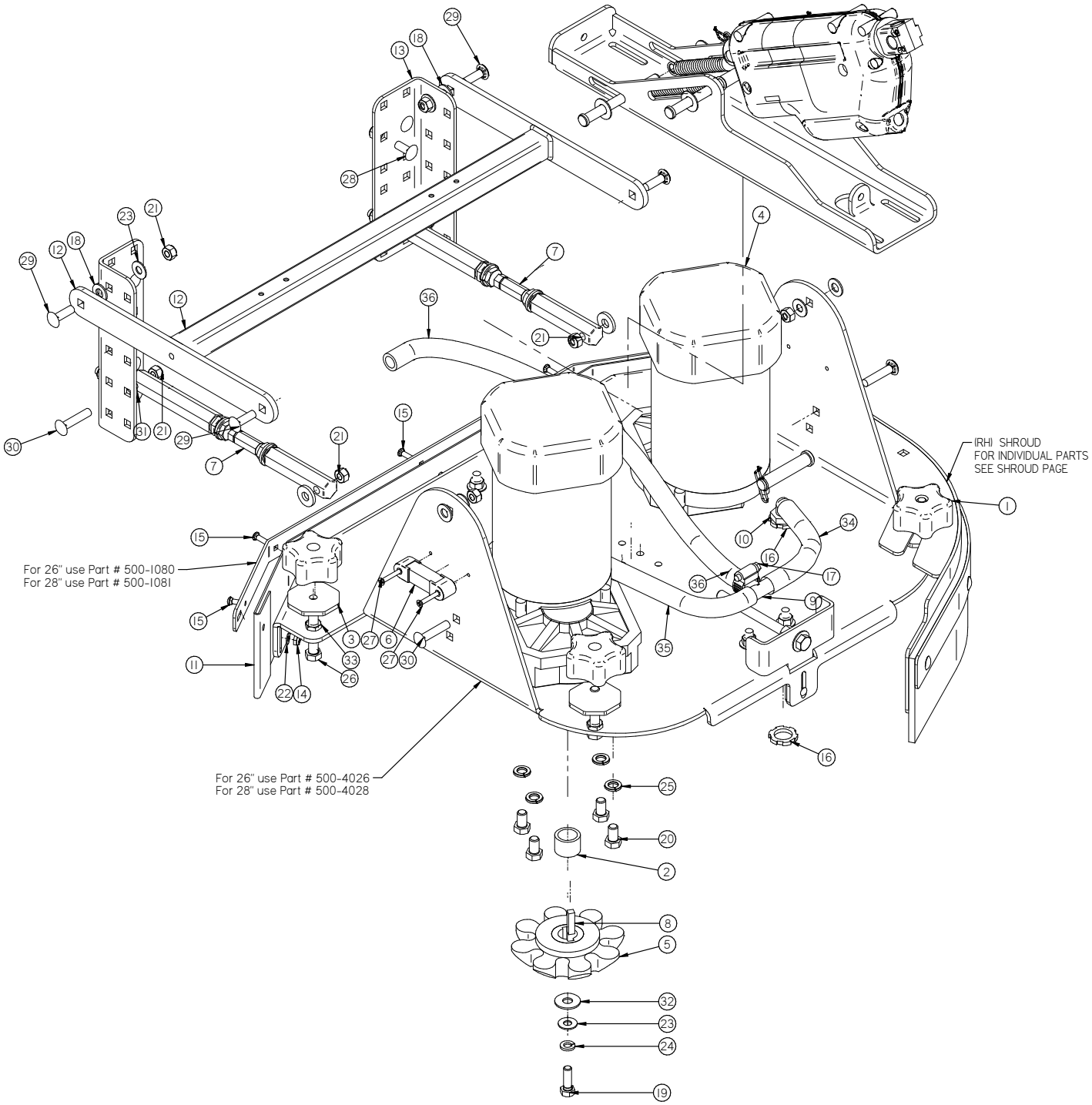

Item	Part No.	Part Description	Qty.	Item	Part No.	Part Description	Qty.
1	150-5786	STAR KNOB, 3/8-16 THREAD	4	19	H-70055	HCS 5/16"- 18 X 1" SS	2
2	175-5005	DRIVER SPACER	2	20	H-70140	HCS 3/8"-24 X 5/8" SS	8
3	250-1184	SHROUD ADJ. KNOB (3/8-16 THREAD)	4	21	H-70861	NYLOK 5/16" - 18 SS	16
4	250-201	MOTOR, 36V, 3/4 HP, 350 RPM	2	22	H-71009	FW #10 SS	5
5	264-5003	BRUSH DRIVER ROUNDED TOOTH	2	23	H-71015	FW 5/16 ID X 3/4 OD SS	6
6	300-4030	LEVEL	2	24	H-71065	LW 5/16" SS	2
7	300-8421	ADJUSTABLE LATERAL ARM	2	25	H-71067	LW 3/8" SS	8
8	5-431	1/4" X 1" KEY	2	26	H-71190	HCS 3/8"- 16 X 2-1/2" SS (FULLY THREADED)	4
9	5-446	1/2 " PLASTIC BARB TEE	1	27	H-72645	FHP #8-32 X 1.0"	4
10	5-447	1/2 NPT X 1/2" BARB ELBOW	2	28	H-74429	CB 5/16"- 18 X 3/4" SS	8
11	500-1164	26/28 FRONT DECK CURTAIN	1	29	H-74430	CB 5/16"- 18 X 1" SS	4
12	500-9586	26/28 INCH LATERAL ARM	1	30	H-74432	CB 5/16"- 18 X 1-1/2" SS	4
13	650-1265	SCRUB ARM BRACKET	2	31	H-98025	FW 3/8" GRADE 8	4
14	H-0129155	JNYL #10-32, 18-8 S/S	5	32	H-99001	FW 3/8" SS NOM ID .4375 X OD 1.0	2
15	H-0172519	CB #10-32 X 5/8" SS	5	33	H-NJ06C	JNYL 3/8- 16 SS	4
16	H-07005	1/2" NPT LOCKNUT	4	34	T-050R0900	1/2"ID X 9"LG DECK HOSE	1
17	H-081	CLAMP 7/16"- 25/32" SS	1	35	T-050R1700	1/2"ID X 17"LG DECK HOSE	1
18	H-4440024	FW 3/8" X 3/4 NYLON	4	36	T-050R3600	1/2"ID X 36"LG SOLUTION HOSE	1

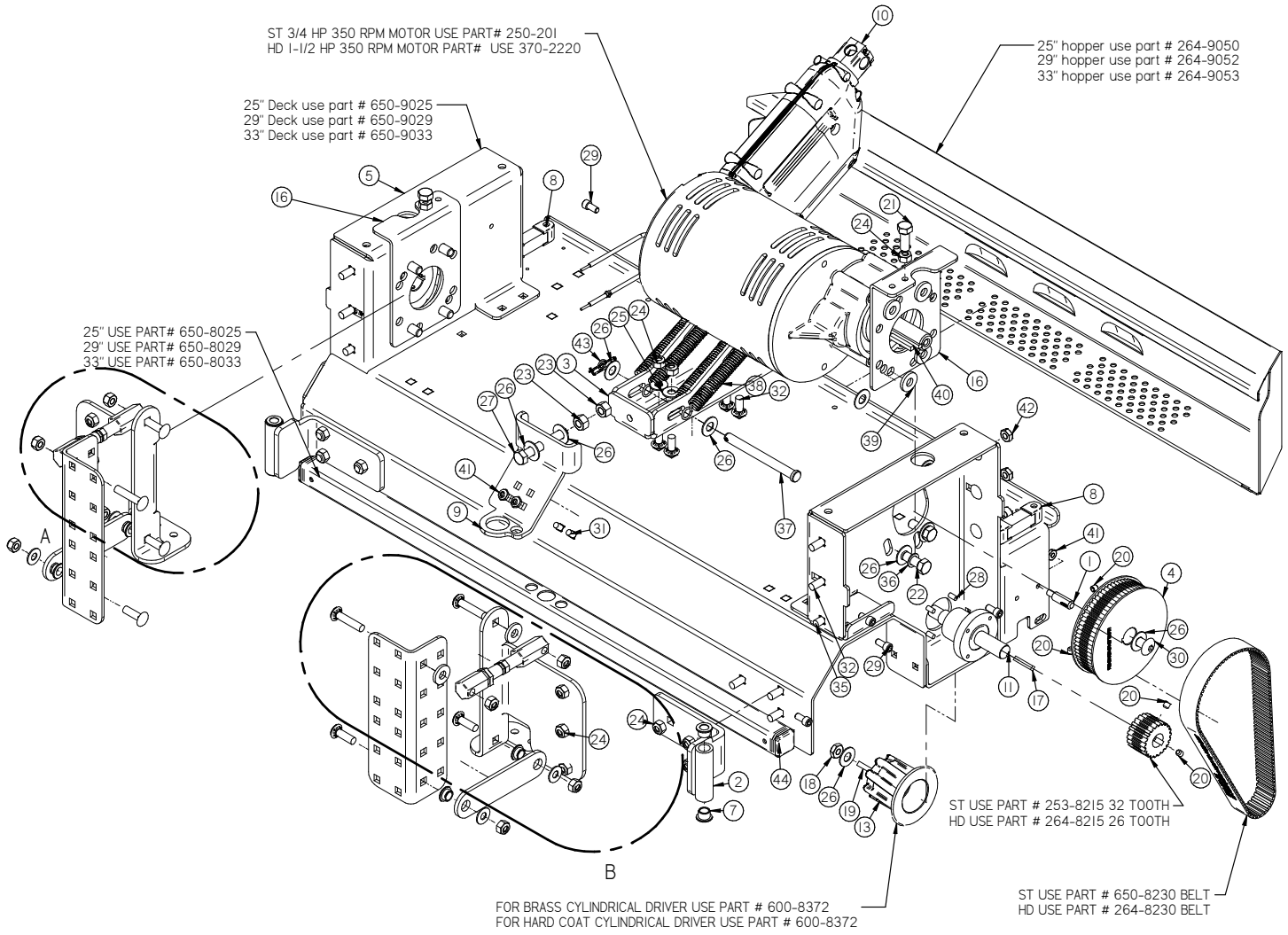
ST 3/4 HP 350 RPM MOTOR USE PART# 250-201
HD 1-1/2 HP 350 RPM MOTOR PART# USE 370-2220
25" hopper use part # 264-9050
29" hopper use part # 264-9052
33" hopper use part # 264-9053
25" Deck use part # 650-9025
29" Deck use part # 650-9029
33" Deck use part # 650-9033
25" USE PART# 650-8025
29" USE PART# 650-8029
33" USE PART# 650-8033
A
B
ST USE PART # 253-8215 32 TOOTH
HD USE PART # 264-8215 26 TOOTH
ST USE PART # 650-8230 BELT
HD USE PART # 264-8230 BELT
FOR BRASS CYLINDRICAL DRIVER USE PART # 600-8372
FOR HARD COAT CYLINDRICAL DRIVER USE PART # 600-8372

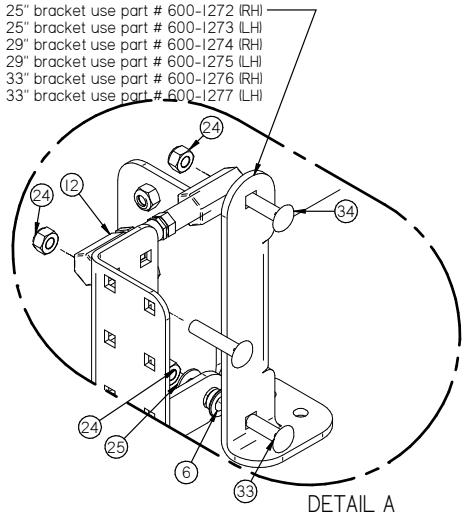
25" bracket use part # 600-1272 (RH)
25" bracket use part # 600-1273 (LH)
29" bracket use part # 600-1274 (RH)
29" bracket use part # 600-1275 (LH)
33" bracket use part # 600-1276 (RH)
33" bracket use part # 600-1277 (LH)
DETAIL A

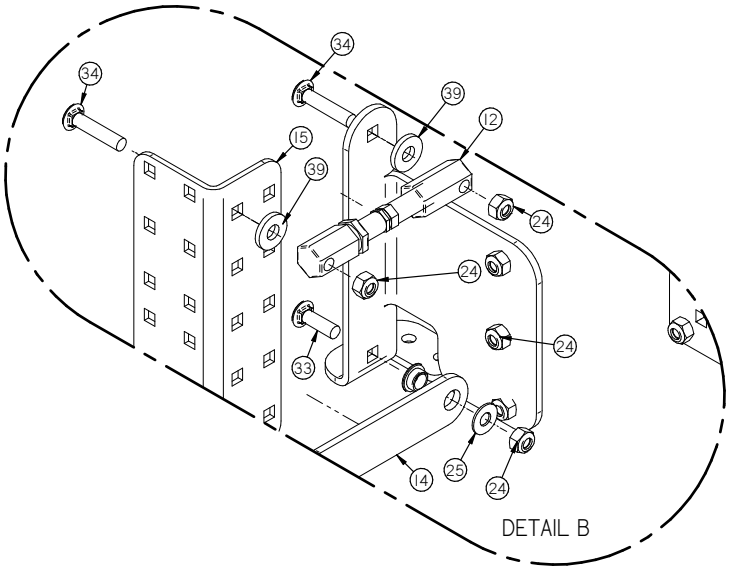
DETAIL B

Item	Part No.	Part Description	Qty.
1	250-0001	RETAINER PIN	2
2	250-1230	SHROUD HINGE	2
3	250-9003	CYLINDRICAL LIFTING BRACKET	1
4	253-8225	TIMING SPROCKET 68 TOOTH	2
5	264-9029	CYLINDRICAL BRUSHHEAD, 29"	1
6	290-1233	3/8" ID, 1/2" OD, 1/4" LG BEARING	4
7	290-1245	3/8" ID, 1/2" OD, 3/8" LG, FLANGE BEARING	4
8	300-4030	LEVEL	2
9	370-1237	SOLUTION FEED BRACKET	1
10	370-2240	2" STROKE 36V ACTUATOR 450 LB LOAD	1
11	370-8240A	BEARING HOUSING/BEARING	2
12	4-25	6.25"ADJUSTABLE LATERAL ARM	2
13	600-8372	CYLINDRICAL DRIVER (BRASS)	2
14	600-9585	CYL. LATERAL ARM	2
15	650-1265	SCRUB ARM BRACKET	2
16	650-9002	MOTOR ADJ BRACKET	2
17	H-01125	3/16" X 1" KEY	2
18	H-0171004	JNYL 3/8- 24 SS	2
19	H-0953152	3/16" X 3/4" KEY	2
20	H-25379	SETSCREW, KCP, 1/4"-20 X 1/4"	8
21	H-70055	HB 5/16"- 18 X 1" SS	2
22	H-70105	HCS 3/8"- 16 X 1" SS	8
23	H-70712	HN 3/8"-16 SS	2
24	H-70861	NYLOK 5/16" - 18 SS	26
25	H-71015	FW 5/16 ID X 3/4 OD SS	14
26	H-71017	FW 3/8 ID X 7/8 OD SS	18
27	H-71190	HCS 3/8"- 16 X 2-1/2" SS (FULLY THREADED)	1
28	H-72682	FHP #10-32 X 1/2" SS	8
29	H-73459	SHCS 1/4-20 X 1/2 SS	8
30	H-73811	BHSCS 3/8"- 16 X 1/2" SS	2
31	H-74417	CB 1/4"- 20 X .5" SS	2
32	H-74429	CB 5/16"- 18 X 3/4" SS	14
33	H-74430	CB 5/16"- 18 X 1" SS	4
34	H-74432	CB 5/16"- 18 X 1-1/2" SS	4
35	H-744??	CB 5/16"- 18 X 1/2" SS	8
36	H-90895	WASHER, SERRATED BELLEVILLE, 3/8", S/S	8
37	H-923903	3/8" X 4" CLEVIS PIN	2
38	H-96544	SPRING, 4-1/8" LG, 9/16 OD, (42E)	4
39	H-98025	FW 3/8" GRADE 8	12
40	H-K14320	3/16" X 1 1/4" KEY	2
41	H-NJ04C	JNYL 1/4" - 20 SS	4
42	H-NJ05C	JNYL 5/16"- 18 SS	6
43	H-RUE14	3/8" RUE RING COTTER	2
44	M-9565K51	1.0 X 1.0 SQ TUBE PLUG	2

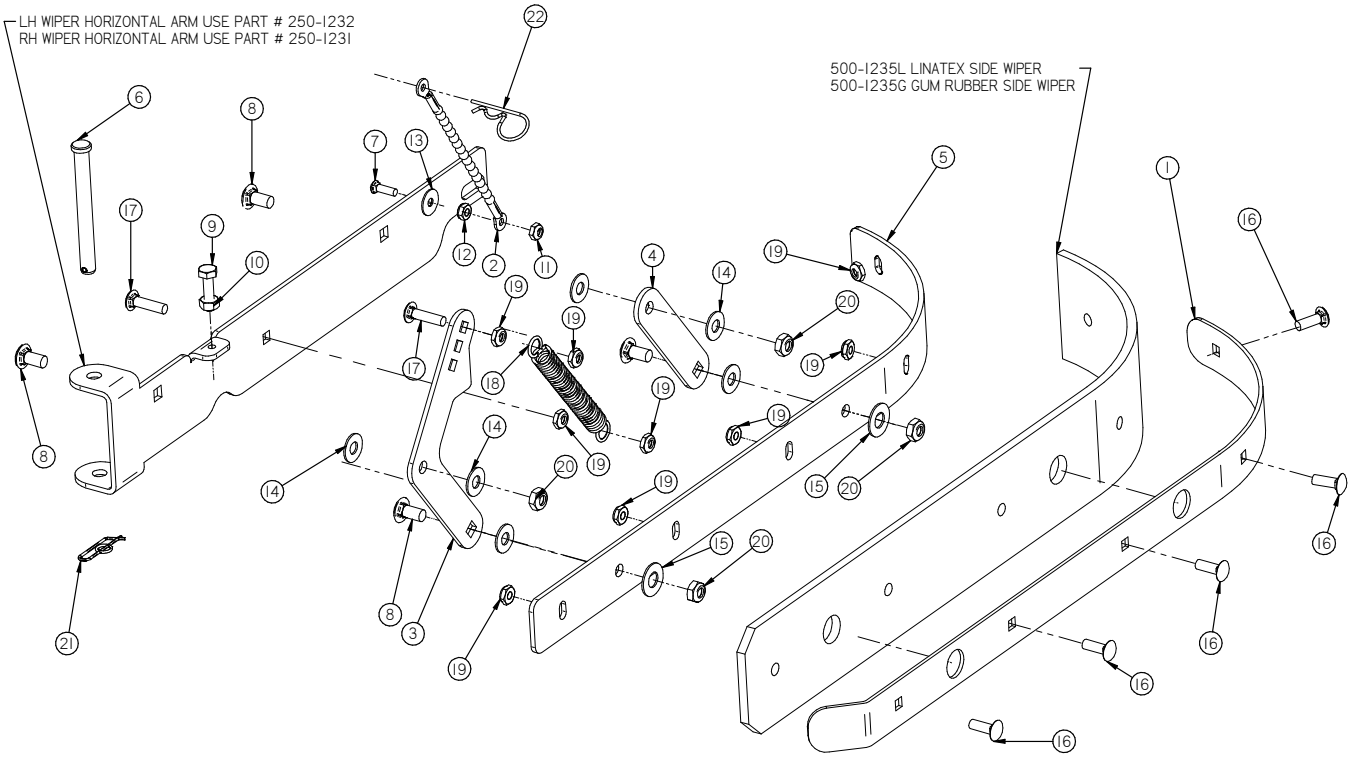

Item	Part No.	Part Description	Qty.
1	250-1236	WIPER BAND	1
2	370-4060	6" LANYARD	1
3	650-1243	SHROUD VERTICAL ARM	1
4	650-1244	WIPER VERTICAL ARM	1
5	650-1245	SHROUD SIDE	1
6	H-0156758	3/8" X 3-1/2" CLEVIS PIN	1
7	H-0172519	CB #10-32 X 5/8" SS	1
8	H-0172526	CB 5/16"- 18 X 5/8" SS	4
9	H-70005	HCS 1/4"- 20 X 1" SS	1
10	H-70710	HN 1/4"- 20 SS	1
11	H-70858	NYLOK #10-32 SS	1
12	H-70923	KN #10-32 SS	1
13	H-71010	FW #10 ID X 11/16 OD SS	1
14	H-71015	FW 5/16 ID X 3/4 OD SS	6
15	H-71017	FW 3/8 ID X 7/8 OD SS	2
16	H-74419	CB 1/4"- 20 X .75" SS	5
17	H-74420	CB 1/4"- 20 X 1.0" SS	2
18	H-96544	SPRING, 4-1/8" LG X 9/16" OD (42E)	1
19	H-NJ04C	JNYL 1/4" - 20 SS	9
20	H-NJ05C	JNYL 5/16"- 18 SS	4
21	H-RUE14	3/8" RUE RING COTTER	1
22	M-92391A044	HAIRPIN, 5/16" - 3/8" X 1-7/16" S/S	1

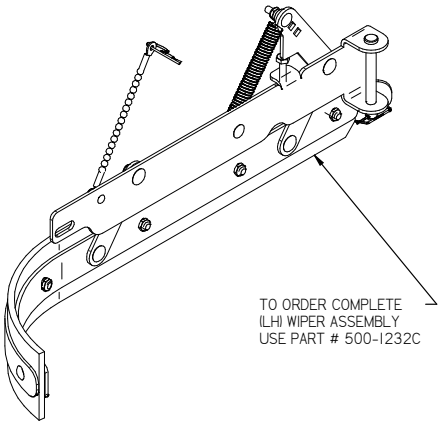

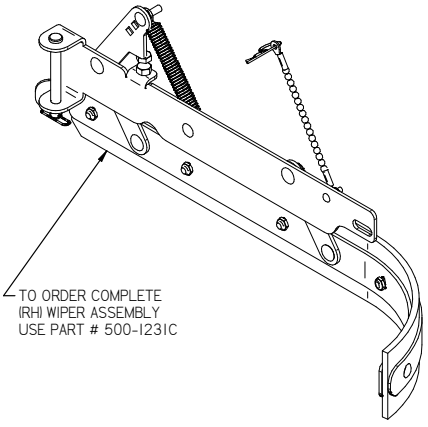

Cylindrical Doors

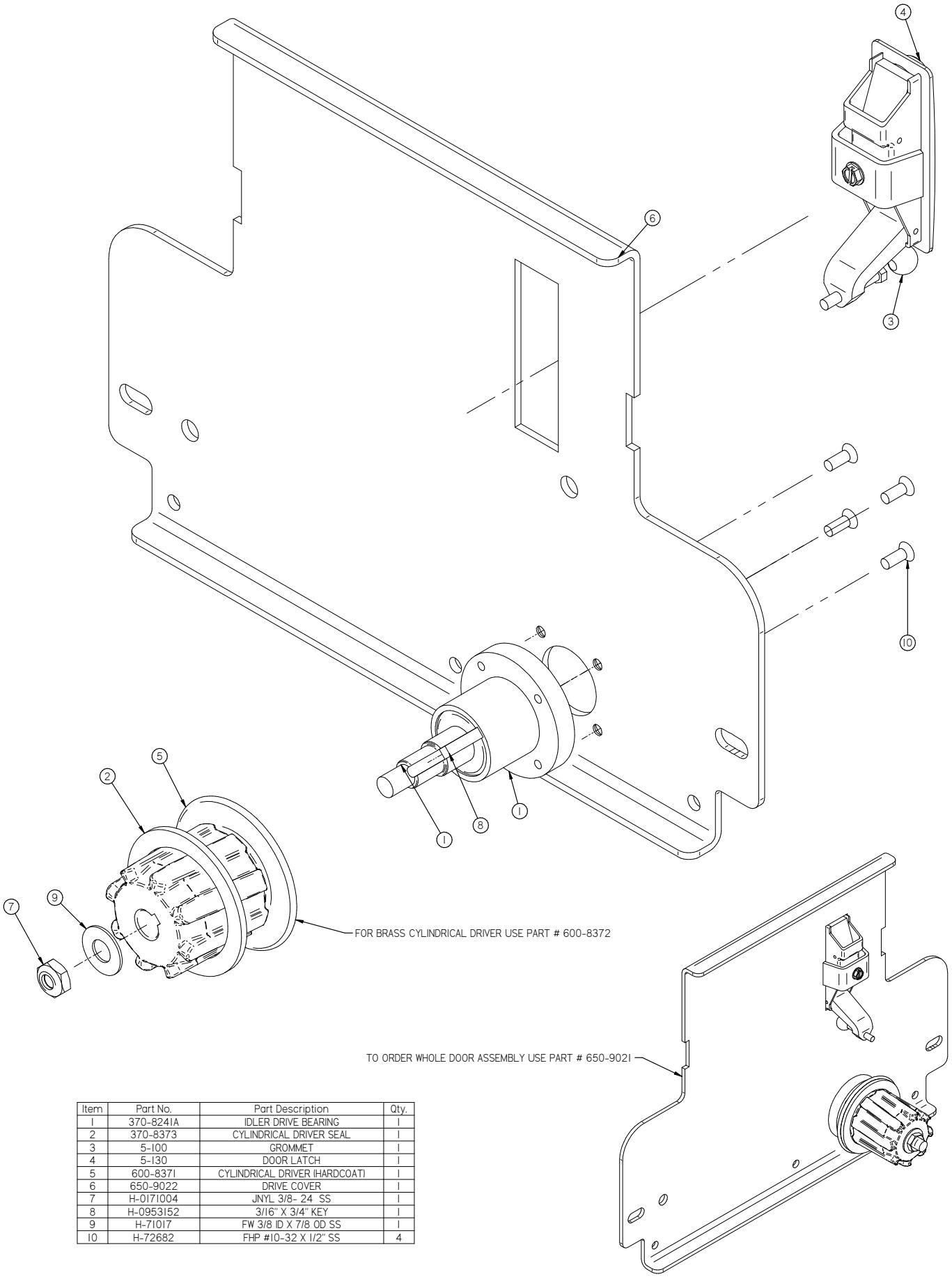

Item	Part No.	Part Description	Qty.
1	370-8241A	IDLER DRIVE BEARING	1
2	370-8373	CYLINDRICAL DRIVER SEAL	1
3	5-100	GROMMET	1
4	5-130	DOOR LATCH	1
5	600-8371	CYLINDRICAL DRIVER (HARDCOAT)	1
6	650-9022	DRIVE COVER	1
7	H-0171004	JNYL 3/8- 24 SS	1
8	H-0953152	3/16" X 3/4" KEY	1
9	H-71017	FW 3/8 ID X 7/8 OD SS	1
10	H-72682	FHP #10-32 X 1/2" SS	4

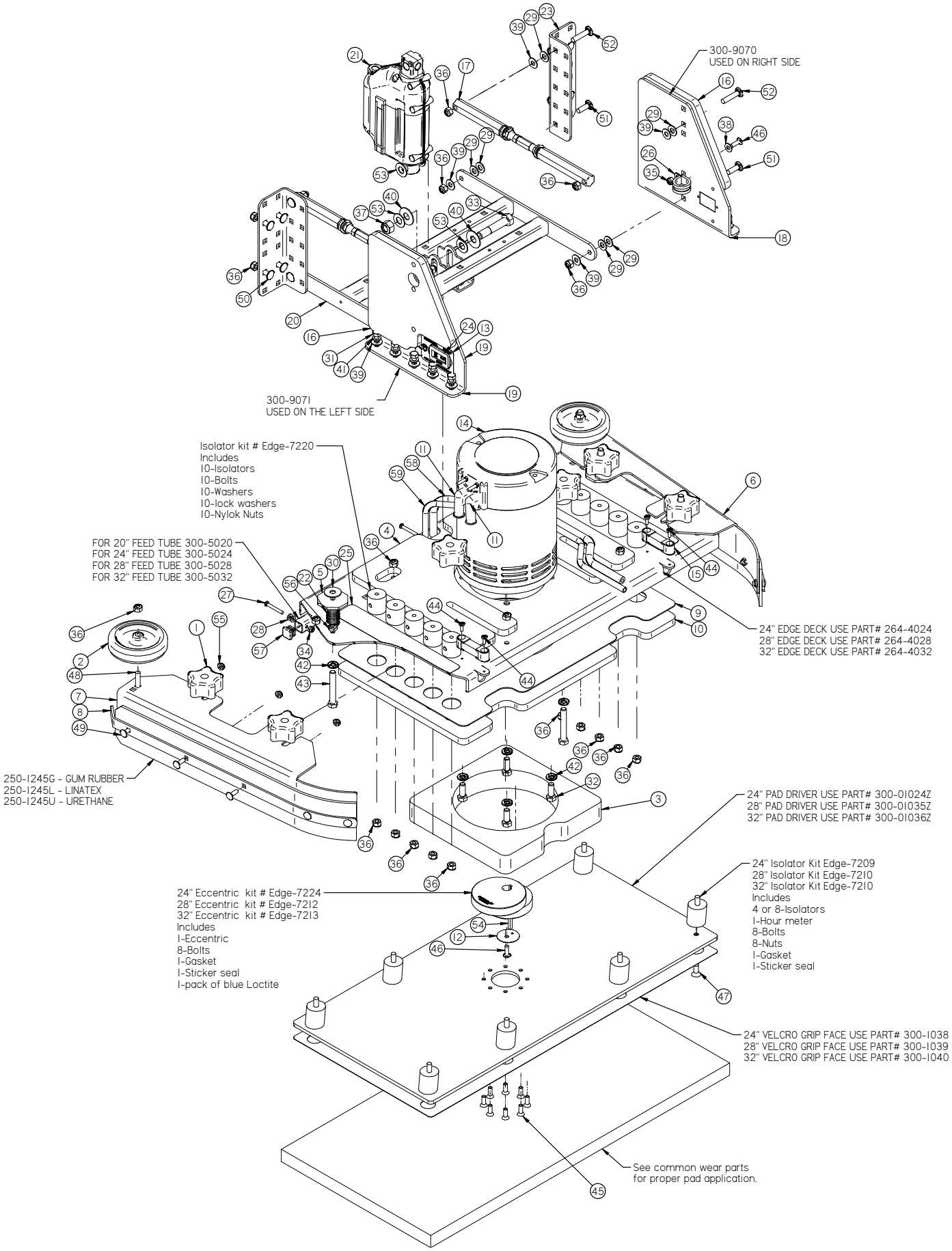
300-9070
USED ON RIGHT SIDE
300-9071
USED ON THE LEFT SIDE
Isolator kit # Edge-7220
Includes
10-Isolators
10-Bolts
10-Washers
10-lock washers
10-Nylok Nuts
FOR 20" FEED TUBE 300-5020
FOR 24" FEED TUBE 300-5024
FOR 28" FEED TUBE 300-5028
FOR 32" FEED TUBE 300-5032
24" EDGE DECK USE PART# 264-4024
28" EDGE DECK USE PART# 264-4028
32" EDGE DECK USE PART# 264-4032
250-1245G - GUM RUBBER
250-1245L - LINATEX
250-1245U - URETHANE
24" PAD DRIVER USE PART# 300-01024Z
28" PAD DRIVER USE PART# 300-01035Z
32" PAD DRIVER USE PART# 300-01036Z
24" Eccentric kit # Edge-7224
28" Eccentric kit # Edge-7212
32" Eccentric kit # Edge-7213
Includes
1-Eccentric
8-Bolts
1-Gasket
1-Sticker seal
1-pack of blue Loctite
24" Isolator Kit Edge-7209
28" Isolator Kit Edge-7210
32" Isolator Kit Edge-7210
Includes
4 or 8-Isolators
1-Hour meter
8-Bolts
8-Nuts
1-Gasket
1-Sticker seal
24" VELCRO GRIP FACE USE PART# 300-1038
28" VELCRO GRIP FACE USE PART# 300-1039
32" VELCRO GRIP FACE USE PART# 300-1040
See common wear parts
for proper pad application.

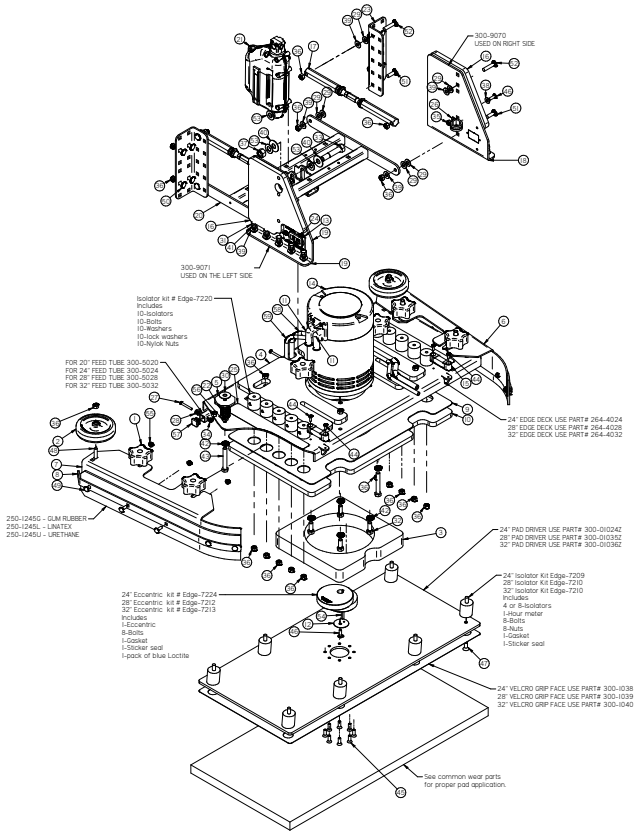
300-9070
USED ON RIGHT SIDE
300-9071
USED ON THE LEFT SIDE
Isolator kit # Edge-7220
Includes
10-Isolators
10-Bolts
10-Washers
10-lock washers
10-Nylok Nuts
FOR 20" FEED TUBE 300-5020
FOR 24" FEED TUBE 300-5024
FOR 28" FEED TUBE 300-5028
FOR 32" FEED TUBE 300-5032
24" EDGE DECK USE PART# 264-4024
28" EDGE DECK USE PART# 264-4028
32" EDGE DECK USE PART# 264-4032
250-1245G - GUM RUBBER
250-1245L - LINATEX
250-1245U - URETHANE
24" PAD DRIVER USE PART# 300-01024Z
28" PAD DRIVER USE PART# 300-01035Z
32" PAD DRIVER USE PART# 300-01036Z
24" Eccentric kit # Edge-7224
28" Eccentric kit # Edge-7212
32" Eccentric kit # Edge-7213
Includes
1-Eccentric
8-Bolts
1-Gasket
1-Sticker seal
1-pack of blue Loctite
24" Isolator Kit Edge-7209
28" Isolator Kit Edge-7210
32" Isolator Kit Edge-7210
Includes
4 or 8-Isolators
1-Hour meter
8-Bolts
8-Nuts
1-Gasket
1-Sticker seal
24" VELCRO GRIP FACE USE PART# 300-1038
28" VELCRO GRIP FACE USE PART# 300-1039
32" VELCRO GRIP FACE USE PART# 300-1040
See common wear parts
for proper pad application.

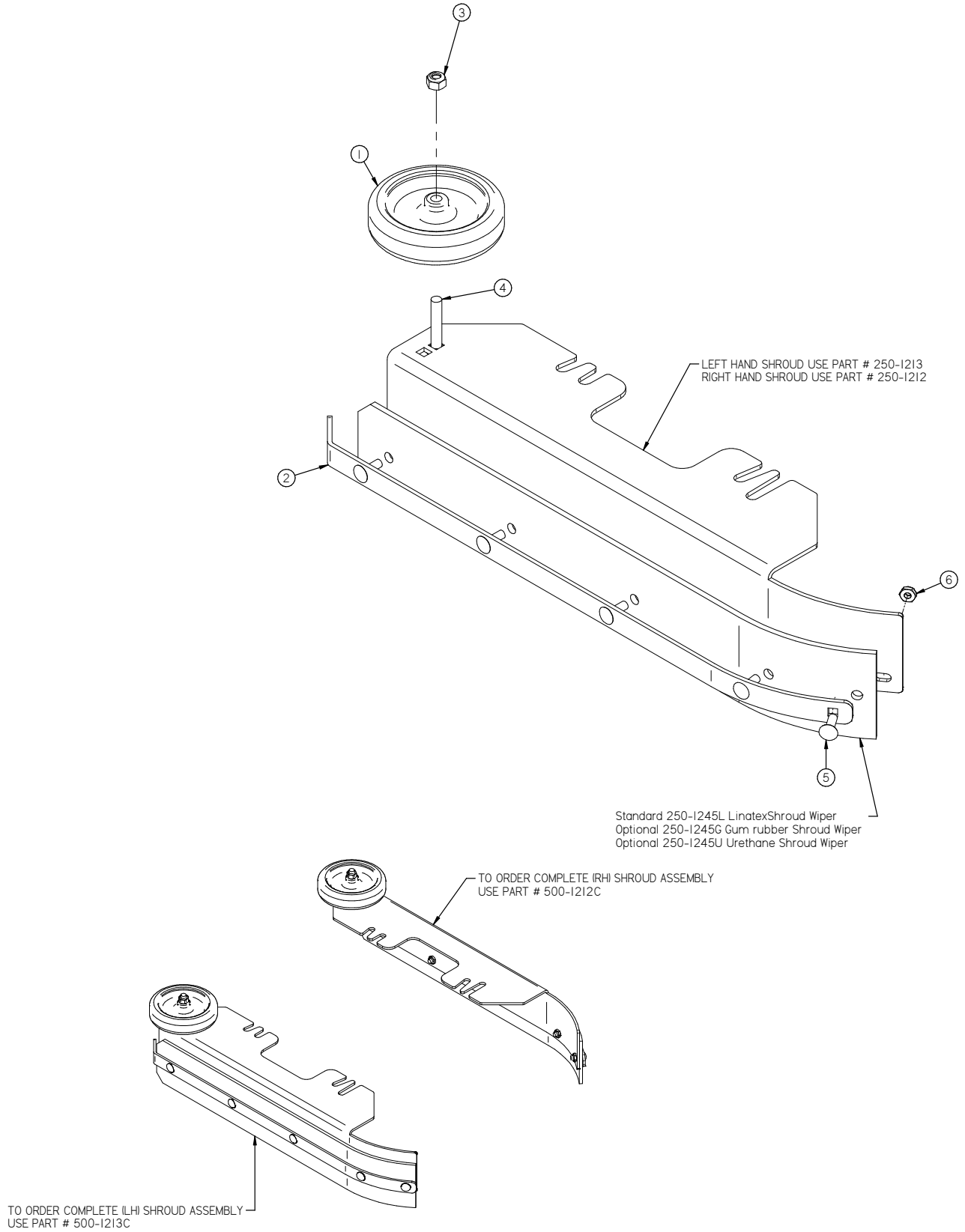

Item	Part No.	Part Description	Qty.
1	150-7600	4" SIDE WHEEL (GREY)	1
2	250-1246	EDGE WIPER BAND	1
3	H-70861	NYLOK 5/16" - 18 SS	1
4	H-74401	CB 5/16"- 18 X 1-3/4" SS	1
5	H-74419	CB 1/4"- 20 X .75" SS	5
6	H-NJ04C	JNYL 1/4" - 20 SS	5

Squeegee Trail Arm - Standard

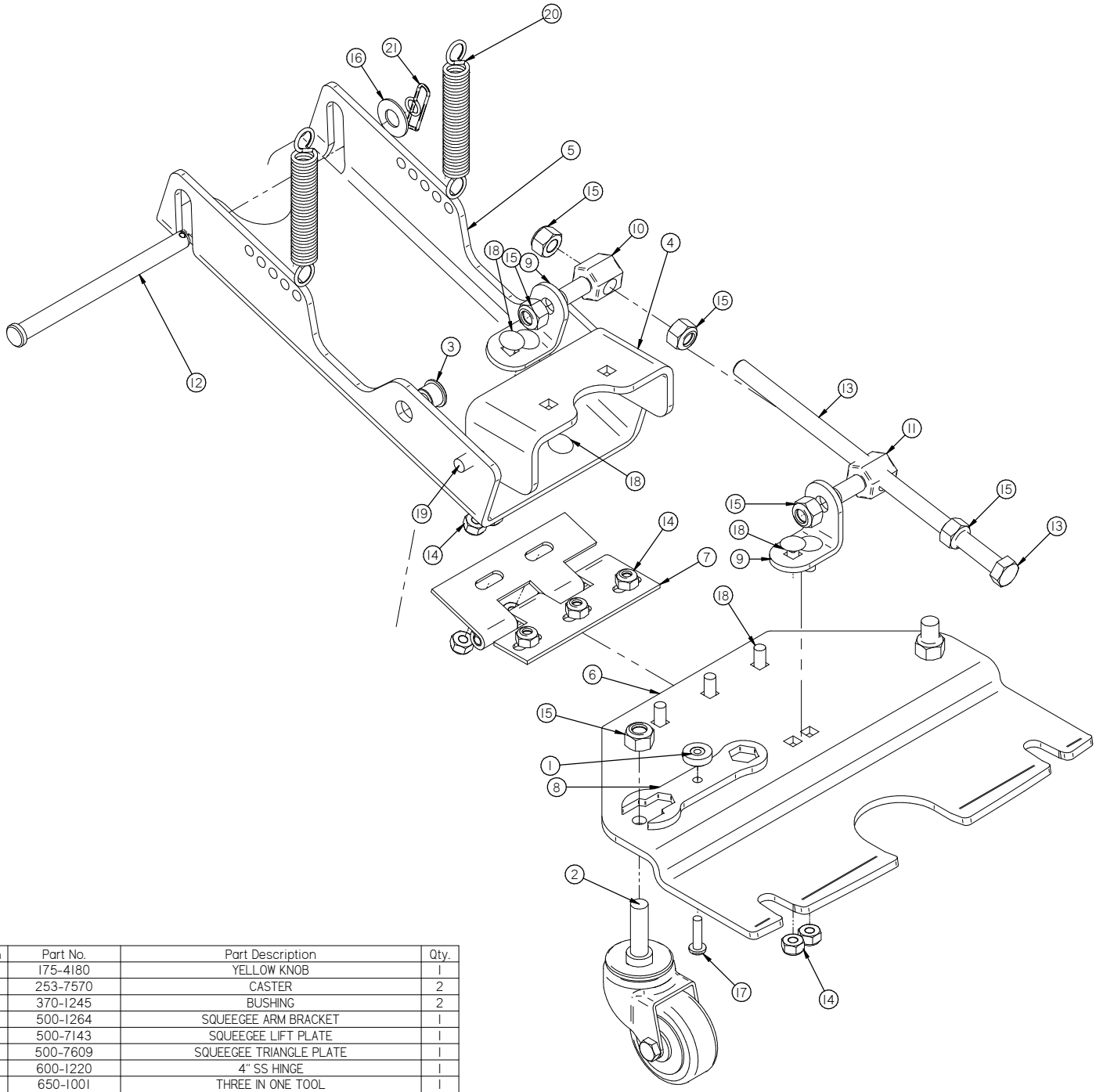

Item	Part No.	Part Description	Qty.
1	175-4180	YELLOW KNOB	1
2	253-7570	CASTER	2
3	370-1245	BUSHING	2
4	500-1264	SQUEEGEE ARM BRACKET	1
5	500-7143	SQUEEGEE LIFT PLATE	1
6	500-7609	SQUEEGEE TRIANGLE PLATE	1
7	600-1220	4" SS HINGE	1
8	650-1001	THREE IN ONE TOOL	1
9	650-7608	SQUEEGEE ADJ. BRACKET	2
10	650-9583	ADJUSTABLE ROD END ANCHOR	1
11	650-9584	THREADED ADJUSTABLE ROD END	1
12	H-04804	3/8" X 5" CLEVIS PIN	1
13	H-06716	HCS 3/8"- 16 X 8" FULL THREAD SS	1
14	H-70860	NYLOK 1/4"- 20 SS	11
15	H-70862	NYLOK 3/8"-16 SS	7
16	H-71017	FW 3/8 ID X 7/8 OD SS	1
17	H-72534	PPH #10-32 X 3/4" S/S	1
18	H-74418	CB 1/4"- 20 X 5/8" S/S	11
19	H-74429	CB 5/16"- 18 X 3/4" SS	2
20	H-96544	SPRING, 4-1/8" LG X 9/16" OD (42E)	2
21	H-RUE14	3/8" RUE RING COTTER	1

Attaching Squeegee Trail Arm, Bumper, & Axle

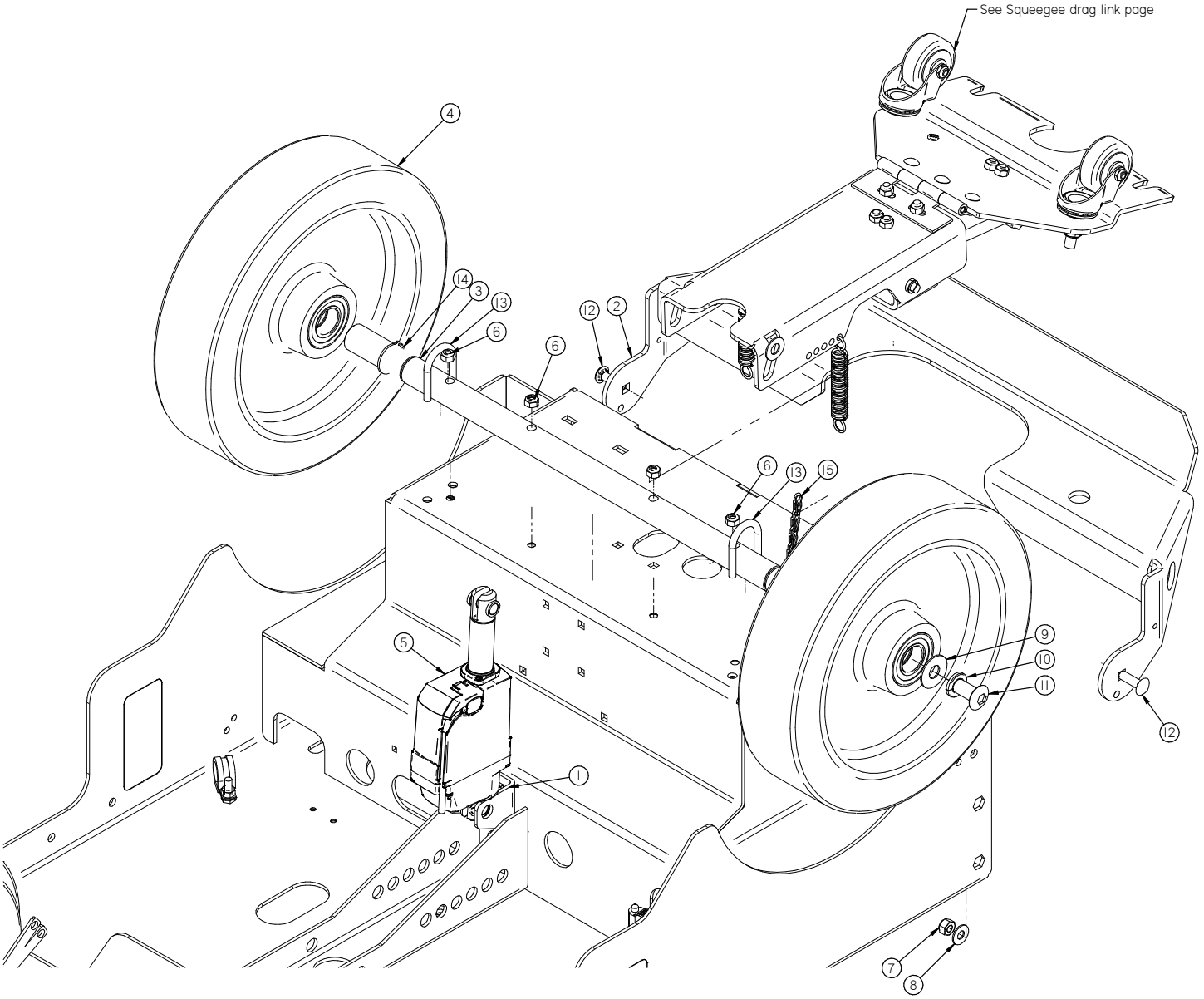

Item	Part No.	Part Description	Qty.
1	150-1006	LIFTING BRACKET	1
2	500-1109	BUMPER/STEP	1
3	500-1271	AXLE	1
4	500-6180G	DRIVE TIRE, GRAY POLY	2
5	650-2240	2 INCH STROKE ACTUATOR	1
6	H-70860	NYLOK 1/4"- 20 SS	3
7	H-70861	NYLOK 5/16" - 18 SS	2
8	H-71015	FW 5/16 ID X 3/4 OD SS	2
9	H-71021	FW 1/2 ID X 1-1/4 OD SS	2
10	H-71071	LW 1/2" SS	2
11	H-73834	BHSCS 1/2- 13 X 1" SS	2
12	H-74430	CB 5/16"- 18 X 1" SS	2
13	M-3043T13	1/4-20 X 1.0" U-BOLT	2
14	M-9858A121	1 INCH EXTERNAL RETAINING RING	2
15	T-360824S0600	6" GOLD GROUDING CHAIN	1

Squeegee Assembly

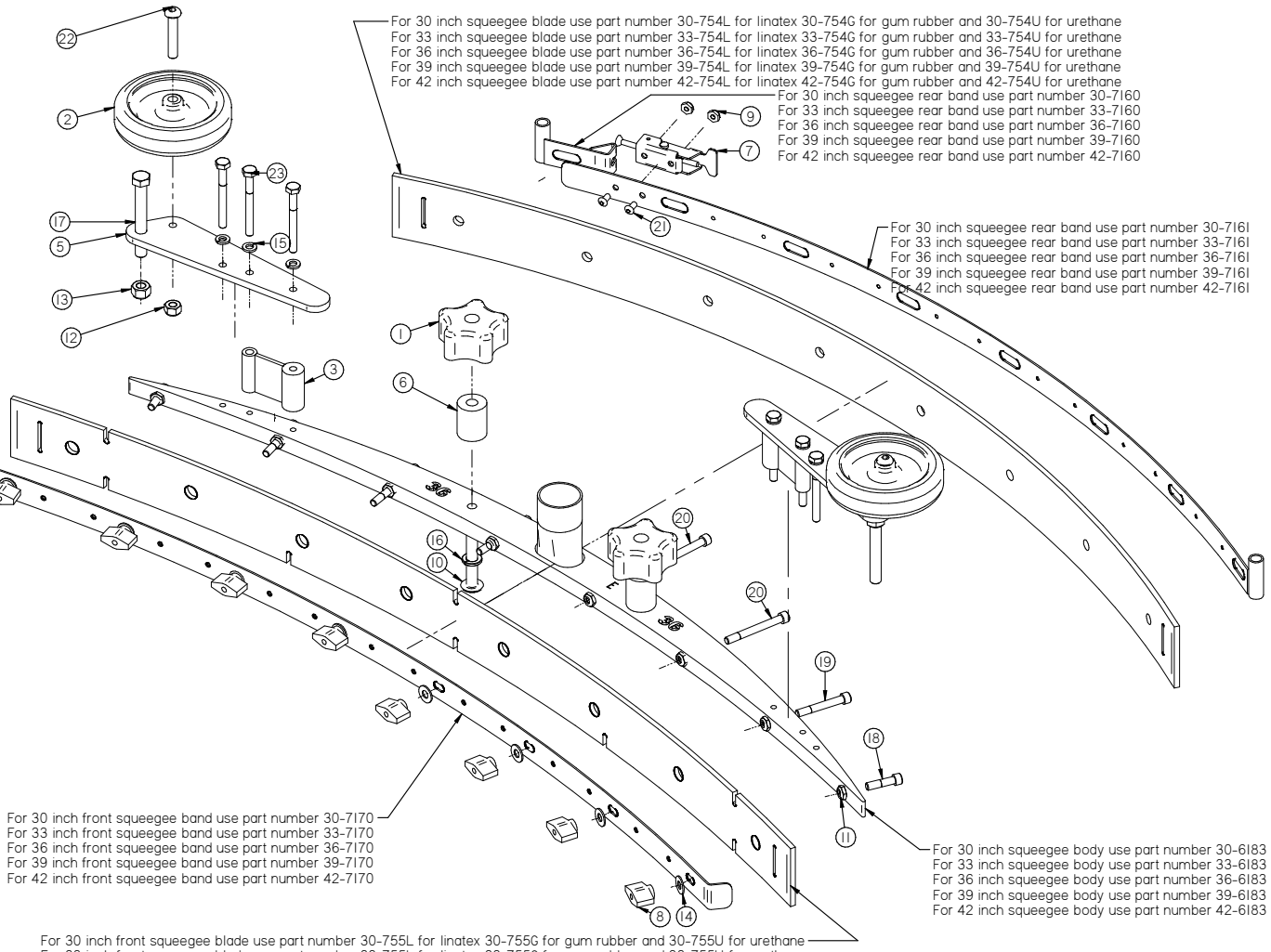

Item	Part No.	Part Description	Qty.	Item	Part No.	Part Description	Qty.
1	150-5786	STAR KNOB, 3/8-16 THREAD	2	13	H-70862	NYLOK 3/8"-16 SS	2
2	150-7600	4" SIDE WHEEL (GREY)	2	14	H-71013	FW 1/4 ID X 5/8 OD SS	8
3	36-0007	BAND BRACKET HOLDER	2	15	H-71063	LW 1/4" SS	6
4*	36-2211	SPACER 1/2 OD X 5/32" LG X.25 ID	6	16	H-71067	LW 3/8" SS	2
5	36-7194	SQUEEGE BRACKET	2	17	H-71191	HCS 3/8"- 16 X 3" SS	2
6	36-8460	STANDOFF, 1.5"	2	18	H-73462	SHCS 1/4-20 X 1.0 SS	2
7	370-0124	LATCH	1	19	H-73465	SHCS 1/4-20 X 1.75 SS	2
8	5-418A	CLAMPING KNOB	8	20	H-73467	SHCS 1/4-20 X 2.25 SS	4
9	H-0129155	JNYL #10-32, 18-8 S/S	2	21	H-73742	BHSCS 10-32 X 3/8" SS	2
10	H-0171299	BHSCS 3/8"- 16 X 3" SS	2	22	H-73783	BHSCS 5/16-18 X 1.75	2
11	H-37020	JNYL 1/4" - 20	8	23	H-77013	HCS 1/4"- 20 X 2.5" SS	6
12	H-70861	NYLOK 5/16" - 18 SS	2				

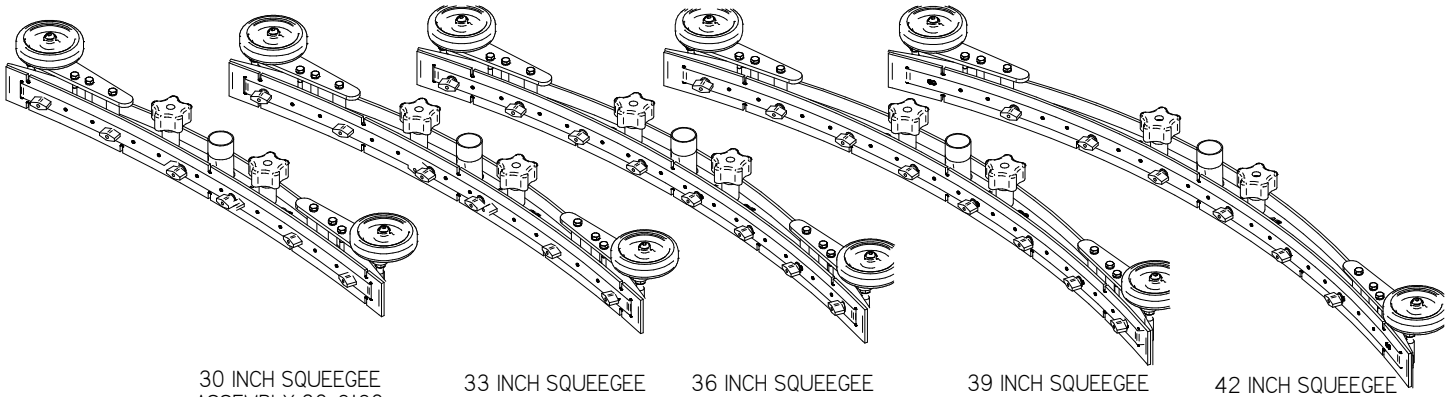

30 INCH SQUEEGEE ASSEMBLY 30-8180

33 INCH SQUEEGEE ASSEMBLY 33-8180

36 INCH SQUEEGEE ASSEMBLY 36-8180

39 INCH SQUEEGEE ASSEMBLY 39-8180

42 INCH SQUEEGEE ASSEMBLY 42-8180

Item	Part No.	Part Description	Qty.
1		SUDS DRAIN HOSE	1
2	150-5280	VALVE BRACKET	1
3	170-4158	1/4" NPT VALVE	1
4	175-9135	INLINE FILTER W/BLACK 40 MESH SCREEN	1
5	5-447	1/2 NPT X 1/2" BARB ELBOW	1
6	5-848	CLAMP 9/16"- 1 1/16" SS	1
7	500-1370	SIGHT TUBE	1
8*	500-9141	SERVICE TRAY	1
9	650-2300	LED STRIP	1
10	650-4500	36V VALVE	1
11	H-0127292	5/8" LOOP CLAMP	3
12	H-0172519	CB #10-32 X 5/8" SS	1
13	H-04788	.50 NPT X .50 BARB	1
14	H-04906	3/4 " PLASTIC BARB TEE	1
15	H-04907	3/4" NPT TO 3/4" BARBED ELBOW	1
16	H-04908	3/4" to 1/2" COUPLING	1
17	H-70858	NYLOK #10-32 SS	1
18	H-70860	NYLOK 1/4"- 20 SS	3
19	H-74419	CB 1/4"- 20 X .75" SS	3
20	M-5346K51	.25 NPTF X .1875 BRASS BARBED HOSE FITTING	1
21	M-5463K445	.25 NPT X .25 BARB	1
22	M-9434T22	1.0 DIA One Hole Tube Clamp	2
23	T-050R6000	BULK 1/2" WIRE REINFORCED HOSE	1
24	T-050R6000	BULK 1/2" WIRE REINFORCED HOSE	1
25	T-050R6000	BULK 1/2" WIRE REINFORCED HOSE	1
26	T-075R6000	BULK 3/4" WIRE REINFORCED HOSE	1
27	T-075R6000	BULK 3/4" WIRE REINFORCED HOSE	1

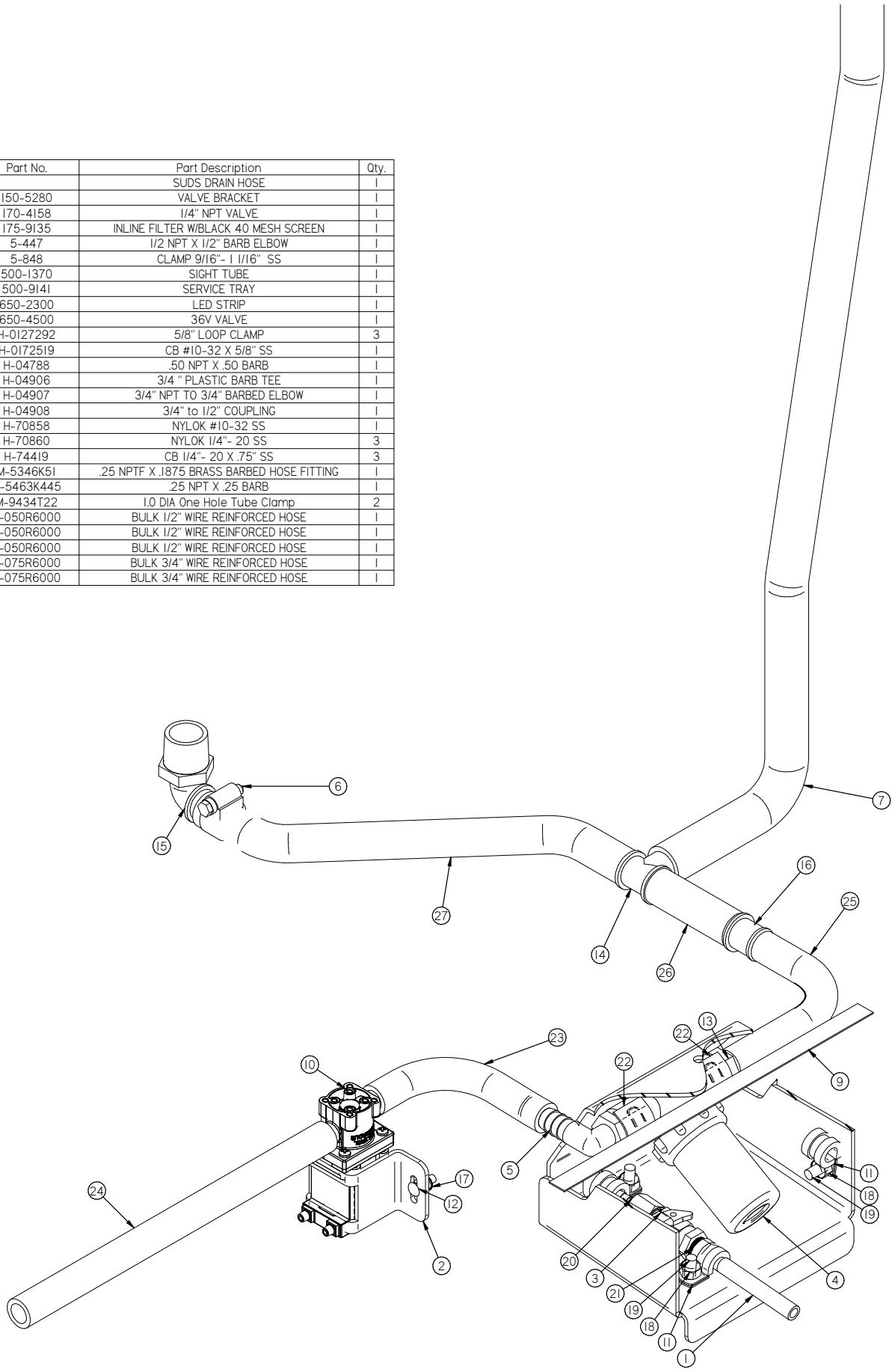

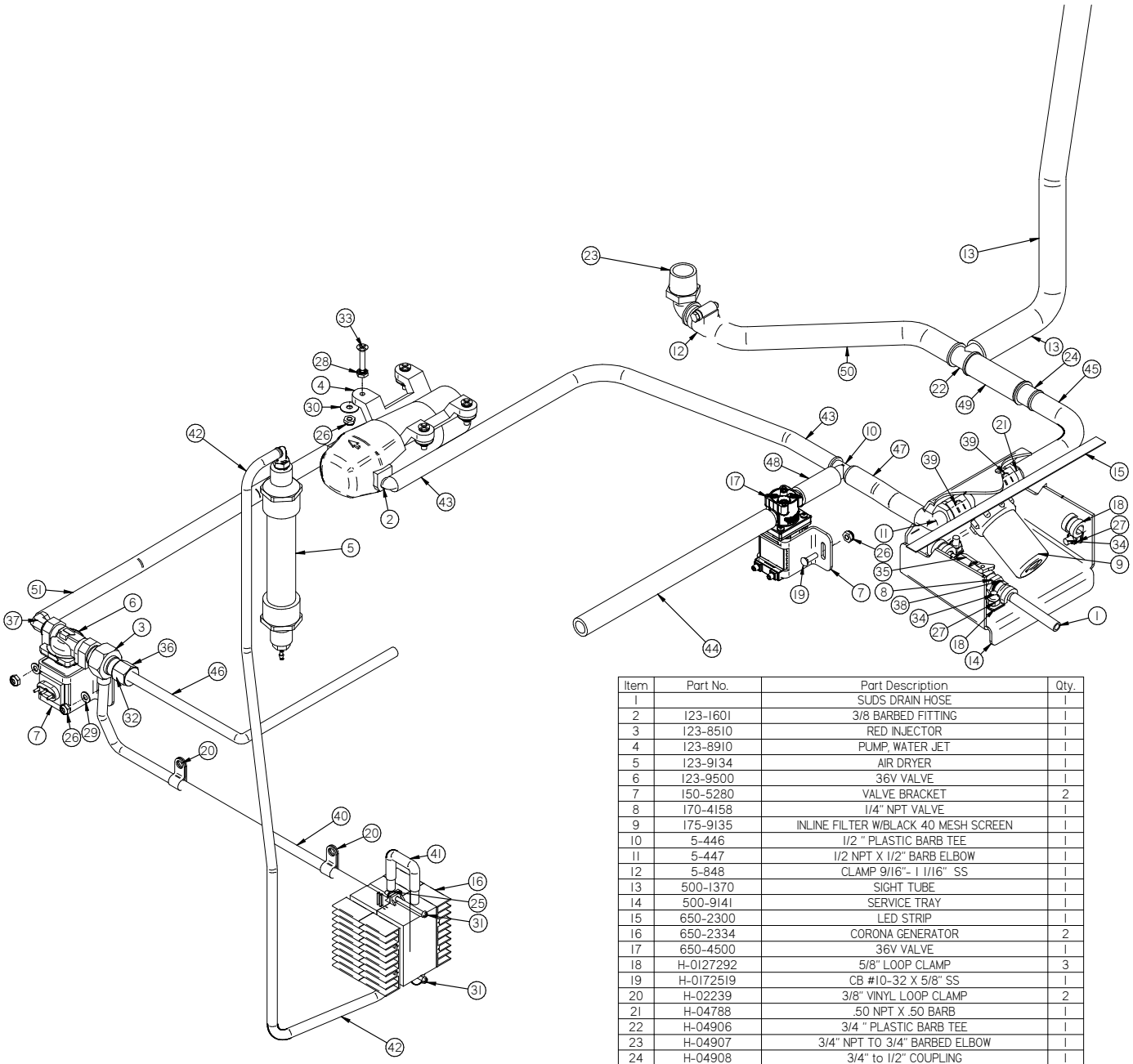

Item	Part No.	Part Description	Qty.
1		SUDS DRAIN HOSE	1
2	123-1601	3/8 BARBED FITTING	1
3	123-8510	RED INJECTOR	1
4	123-8910	PUMP, WATER JET	1
5	123-9134	AIR DRYER	1
6	123-9500	36V VALVE	1
7	150-5280	VALVE BRACKET	2
8	170-4158	1/4" NPT VALVE	1
9	175-9135	INLINE FILTER W/BLACK 40 MESH SCREEN	1
10	5-446	1/2 " PLASTIC BARB TEE	1
11	5-447	1/2 NPT X 1/2" BARB ELBOW	1
12	5-848	CLAMP 9/16"- 1 1/16" SS	1
13	500-1370	SIGHT TUBE	1
14	500-9141	SERVICE TRAY	1
15	650-2300	LED STRIP	1
16	650-2334	CORONA GENERATOR	2
17	650-4500	36V VALVE	1
18	H-0127292	5/8" LOOP CLAMP	3
19	H-0172519	CB #10-32 X 5/8" SS	1
20	H-02239	3/8" VINYL LOOP CLAMP	2
21	H-04788	.50 NPT X .50 BARB	1
22	H-04906	3/4 " PLASTIC BARB TEE	1
23	H-04907	3/4" NPT TO 3/4" BARBED ELBOW	1
24	H-04908	3/4" to 1/2" COUPLING	1
25	H-70855	NYLOK #6-32 SS	1
26	H-70858	NYLOK #10-32 SS	7
27	H-70860	NYLOK 1/4"- 20 SS	3
28	H-70923	KN #10-32 SS	4
29	H-71009	FW #10 SS	2
30	H-71010	FW #10 ID X 11/16 OD SS	4
31	H-72393	PPH #6-32 X 2" MS S/S	2
32	H-72683	FHP #10-32 X 5/8" SS	1
33	H-72685	FHP 10-32 X 1" SS	4
34	H-74419	CB 1/4"- 20 X .75" SS	3
35	M-5346K51	.25 NPTF X .1875 BRASS BARBED HOSE FITTING	1
36	M-5346K52	.375 NPT X .25 BRASS BARBED HOSE FITTING	1
37	M-53525K18	.375 NPT X 375 BRASS BARBED ELBOW	1
38	M-5463K445	.25 NPT X .25 BARB	1
39	M-9434T22	1.0 DIA One Hole Tube Clamp	2
40	T-025CS6000	BULK 1/4" ID CLEAR SILICONE ZERO HOSE	1
41	T-025CS6000	BULK 1/4" ID CLEAR SILICONE ZERO HOSE	1
42	T-025CS6000	BULK 1/4" ID CLEAR SILICONE ZERO HOSE	1
43	T-050R6000	BULK 1/2" WIRE REINFORCED HOSE	1
44	T-050R6000	BULK 1/2" WIRE REINFORCED HOSE	1
45	T-050R6000	BULK 1/2" WIRE REINFORCED HOSE	1
46	T-050R6000	BULK 1/2" WIRE REINFORCED HOSE	1
47	T-050R6000	BULK 1/2" WIRE REINFORCED HOSE	1
48	T-050R6000	BULK 1/2" WIRE REINFORCED HOSE	1
49	T-075R6000	BULK 3/4" WIRE REINFORCED HOSE	1
50	T-075R6000	BULK 3/4" WIRE REINFORCED HOSE	1
51	T-375R6000	BULK 3/8" WIRE REINFORCED HOSE	1

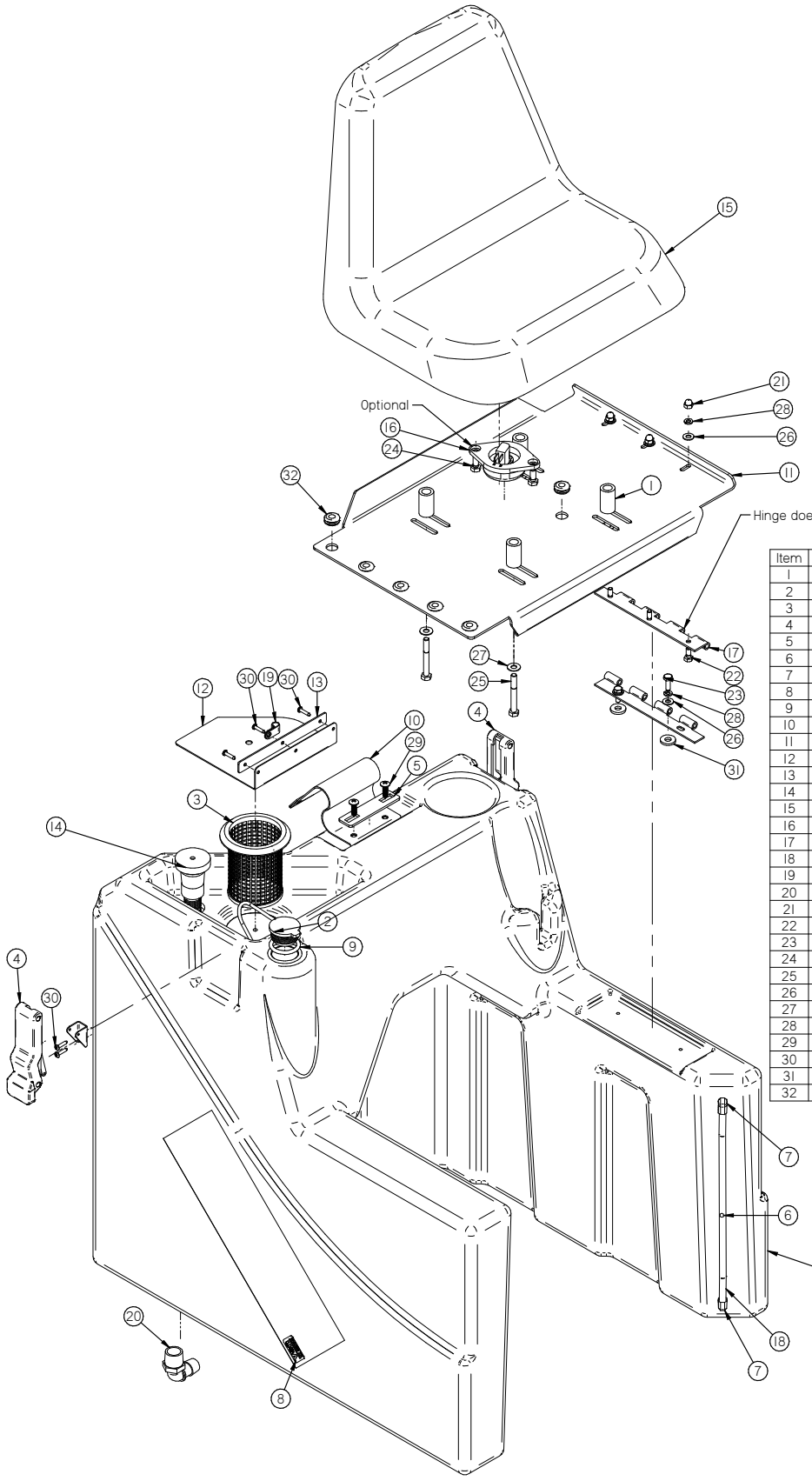

Item	Part No.	Part Description	Qty.
1	170-2700	SPACER, 1-1/2" LG	4
2	170-7211	1-1/2 HOSE CAP	1
3	170-8911	SCREEN STRAINER, 4-1/4" LG	1
4	250-1240	LATCH	2
5	253-1040	TANK STRAP SUPPORT	1
6	290-4148	7/32" POLYPROPYLENE BALL	1
7	290-4149	1/4" NPT X 1/4" BARB X 90 DEG	2
8	370-7218	USA STICKER	2
9	5-8290	O-RING, #324, 1.35" X 1.77" X .210" BUNA-N	1
10	500-1045	TANK STRAP, 22" LG X 4" WIDE	1
11	500-1102	BATTERY LID	1
12	500-1229	SPLASH CURTAIN	1
13	500-1230	CURTAIN BAND	1
14	500-1380	FILL HOSE	1
15	500-1390	SEAT	1
16	500-1431	SEAT SWITCH	1
17	500-8000	8" SS HINGE SHORT FLANGE	1
18	600-0110	sight tube	1
19	H-02239	3/8" VINYL LOOP CLAMP	1
20	H-04907	3/4" NPT TO 3/4" BARBED ELBOW	1
21	H-37708	1/4-20 LC ACORN NUT	3
22	H-70002	HCS 1/4"-20 X 5/8" SS	3
23	H-70003	HCS 1/4"-20 X 3/4" SS	2
24	H-70053	HCS 5/16"- 18 X 3/4" SS	2
25	H-70063	HCS 5/16"- 18 X 2-1/2" SS	4
26	H-71013	FW 1/4 ID X 5/8 OD SS	5
27	H-71015	FW 5/16 ID X 3/4 OD SS	4
28	H-71063	LW 1/4" SS	5
29	H-71894	#14 X 1" SELF TAPPING SCREW	2
30	H-72916	PPH SMS #8 X 3/4" SS	7
31	H-98025	FW 3/8" GRADE 8	2
32	M-9307K23	GROMMET .625 DIAMETER HOLE .125 THICK PANEL	6

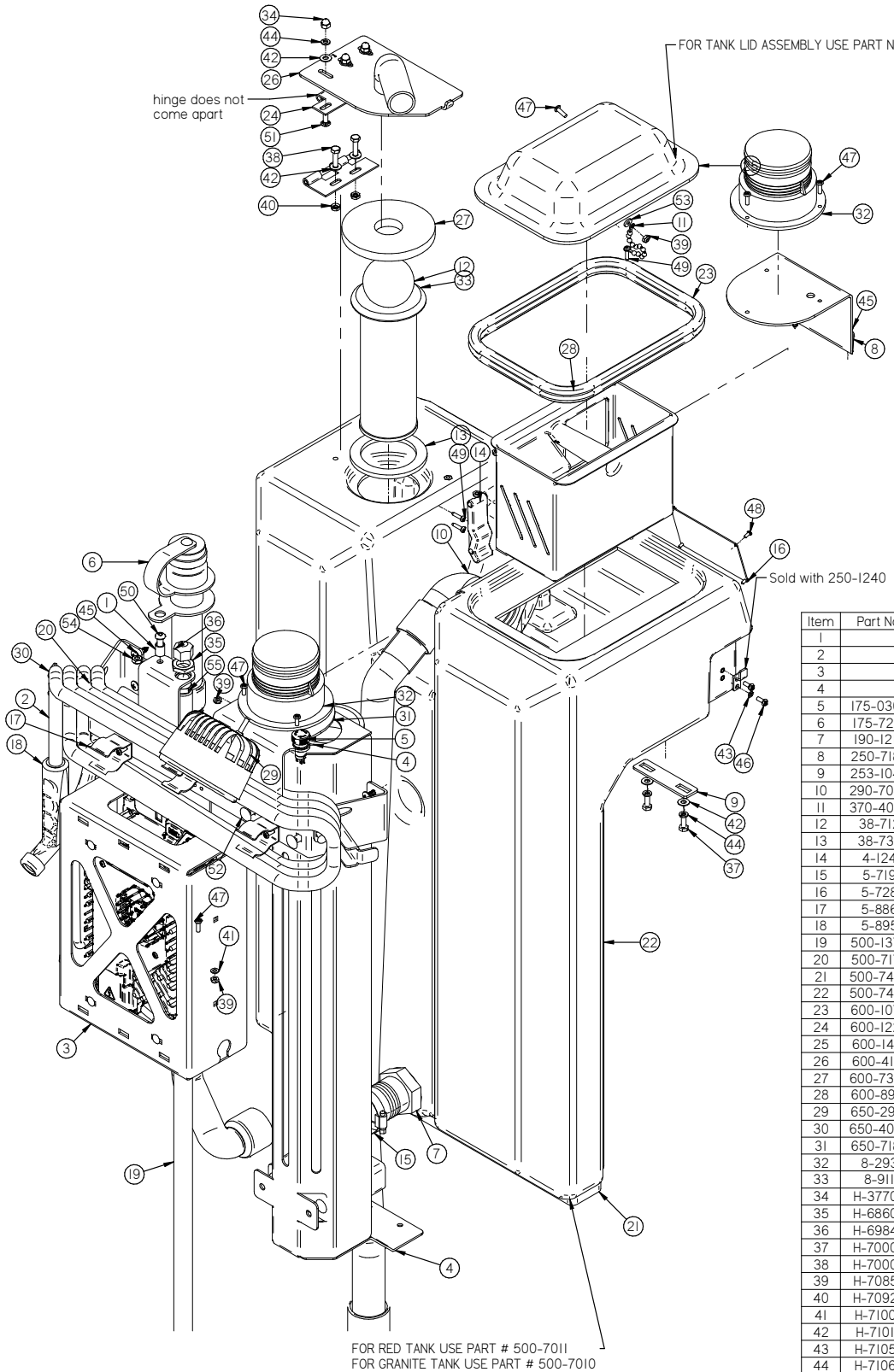

Item	Part No.	Part Description	Qty.
1		THREAD COVER BLACK TUBING	1
2		SPRAY JET HOSE.par	1
3		VERTICAL CHARGER MOUNT	1
4		PILOT SUDS BRACKET.asm	1
5	175-0300	Emergency stop switch, 51 series, IC/O	1
6	175-7210	RECOVERY DRAIN HOSE	1
7	190-1210	2.0 NPT X 2.0" BARB	1
8	250-7185	STROBE LIGHT BRACKET	1
9	253-1040	TANK STRAP SUPPORT	1
10	290-7040	2" NPT X 2" BARB STREET ELBOW, BLACK	1
11	370-4060	6" LANYARD	1
12	38-712	OVERFILL SHUTOFF BALL	1
13	38-738	STRAINER GASKET	1
14	4-124	LATCH	1
15	5-719	CLAMP 1 9/16 - 2 1/2 " SS	1
16	5-728	DETERGENT WARNING PLATE	1
17	5-886	WAND CLIP	3
18	5-895	SPRAY NOZZLE	1
19	500-1370	SIGHT TUBE	1
20	500-7179	TANK UTILITY HANDLE	1
21	500-7420	BOTTOM TANK GASKET	1
22	500-7422	VERTICAL TANK GASKET	2
23	600-1075	PUSH-ON RUBBER GASKET	1
24	600-1220	4" SS HINGE	1
25	600-1410	VAC FORMED CLEAR COVER	1
26	600-4110	VAC SCREEN INLET	1
27	600-7390	VAC INLET GASKET	1
28	600-8915	DRAIN SAVER BASKET	1
29	650-2910	BLUE WARNING LIGHT	1
30	650-4043	HOSE WRAP	2
31	650-7185	STROBE/BLUE LIGHT BRACKET	1
32	8-293	STROBE LIGHT	2
33	8-911	SCREEN STRAINER	1
34	H-37708	1/4-20 LC ACORN NUT	3
35	H-68600	1/2" NPT BRASS NUT	1
36	H-69843	.50 NPT CAP	1
37	H-70003	HCS 1/4"-20 X 3/4" SS	2
38	H-70005	HCS 1/4"- 20 X 1" SS	2
39	H-70858	NYLOK #10-32 SS	14
40	H-70925	KN 1/4-20 S/S	2
41	H-71009	FW #10 SS	1
42	H-71013	FW 1/4 ID X 5/8 OD SS	7
43	H-71059	LW #10, SS	4
44	H-71063	LW 1/4" SS	5
45	H-71894	#14 X 1" SELF TAPPING SCREW	7
46	H-72515	PPH #10-32 X 1/2" S/S	10
47	H-72517	PPH #10-32 X 5/8" SS	8
48	H-72902	PPH SMS #6 X 3/8" SS	4
49	H-72916	PPH SMS #8 X 3/4" SS	3
50	H-73780	BHSCS 5/16-18 X 1	1
51	H-74418	CB 1/4"- 20 X 5/8" S/S	9
52	H-74442	CB 3/8"- 16 X 3-1/2" SS	2
53	H-90133	.17 ID X .5 OD X .093 NEOPRENE WASHER	1
54	H-NJ05C	JNYL 5/16"- 18 SS	1
55	M-5346K68	.50 NPT X .75 BARB	1

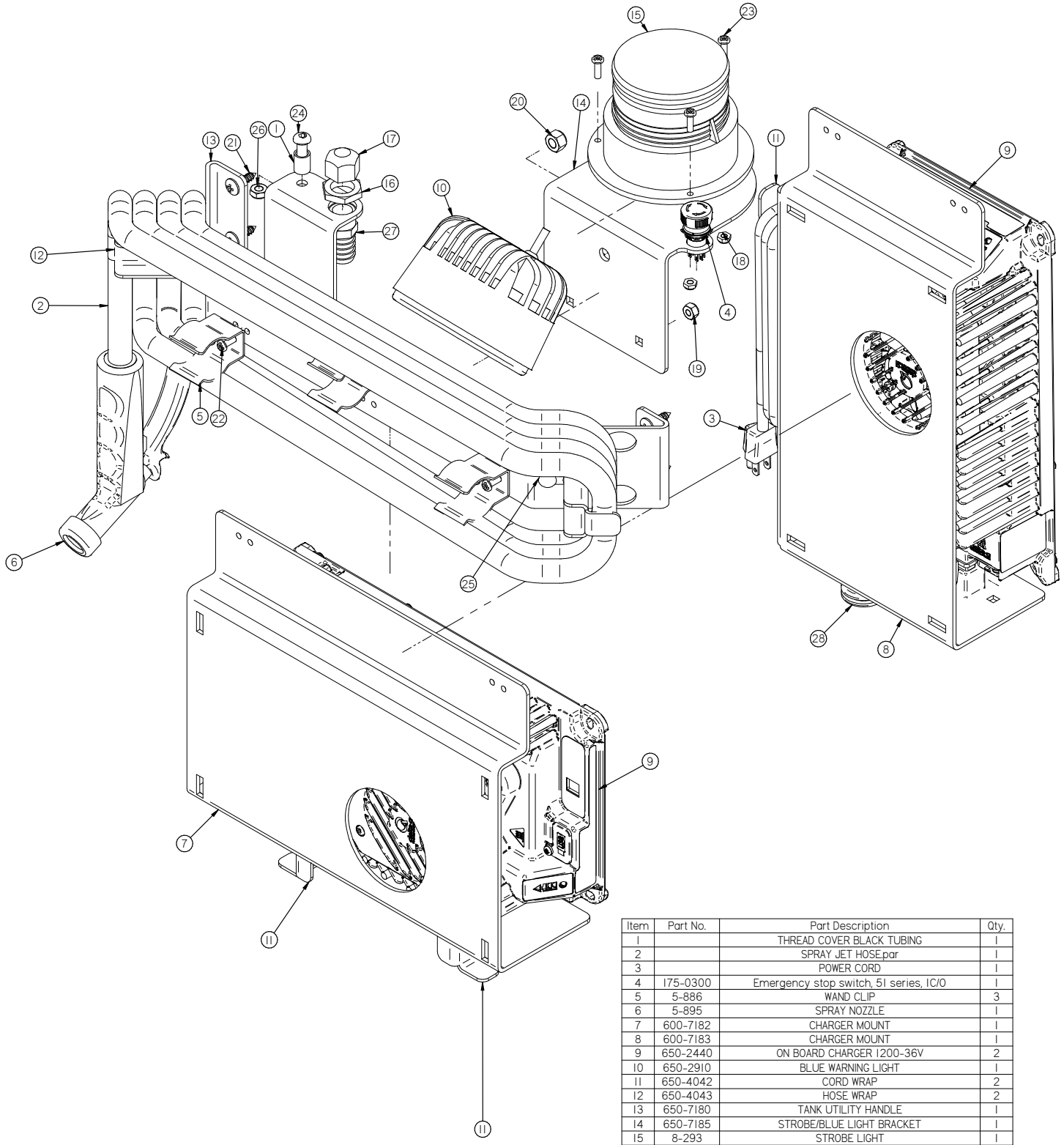

Item	Part No.	Part Description	Qty.
1		THREAD COVER BLACK TUBING	1
2		SPRAY JET HOSE.par	1
3		POWER CORD	1
4	175-0300	Emergency stop switch, 51 series, IC/O	1
5	5-886	WAND CLIP	3
6	5-895	SPRAY NOZZLE	1
7	600-7182	CHARGER MOUNT	1
8	600-7183	CHARGER MOUNT	1
9	650-2440	ON BOARD CHARGER 1200-36V	2
10	650-2910	BLUE WARNING LIGHT	1
11	650-4042	CORD WRAP	2
12	650-4043	HOSE WRAP	2
13	650-7180	TANK UTILITY HANDLE	1
14	650-7185	STROBE/BLUE LIGHT BRACKET	1
15	8-293	STROBE LIGHT	1
16	H-68600	1/2" NPT BRASS NUT	1
17	H-69843	.50 NPT CAP	1
18	H-70858	NYLOK #10-32 SS	9
19	H-70860	NYLOK 1/4"- 20 SS	6
20	H-70862	NYLOK 3/8"-16 SS	1
21	H-71894	#14 X 1" SELF TAPPING SCREW	4
22	H-72515	PPH #10-32 X 1/2" S/S	6
23	H-72517	PPH #10-32 X 5/8" SS	3
24	H-73780	BHSCS 5/16-18 X 1	1
25	H-74418	CB 1/4"- 20 X 5/8" S/S	6
26	H-NJ05C	JNYL 5/16"- 18 SS	1
27	M-5346K68	.50 NPT X .75 BARB	1
28	M-9307K82	GROMMET, 3/4" ID X 1-3/8" OD BUNA-N	2

Vacuum Motor Assembly

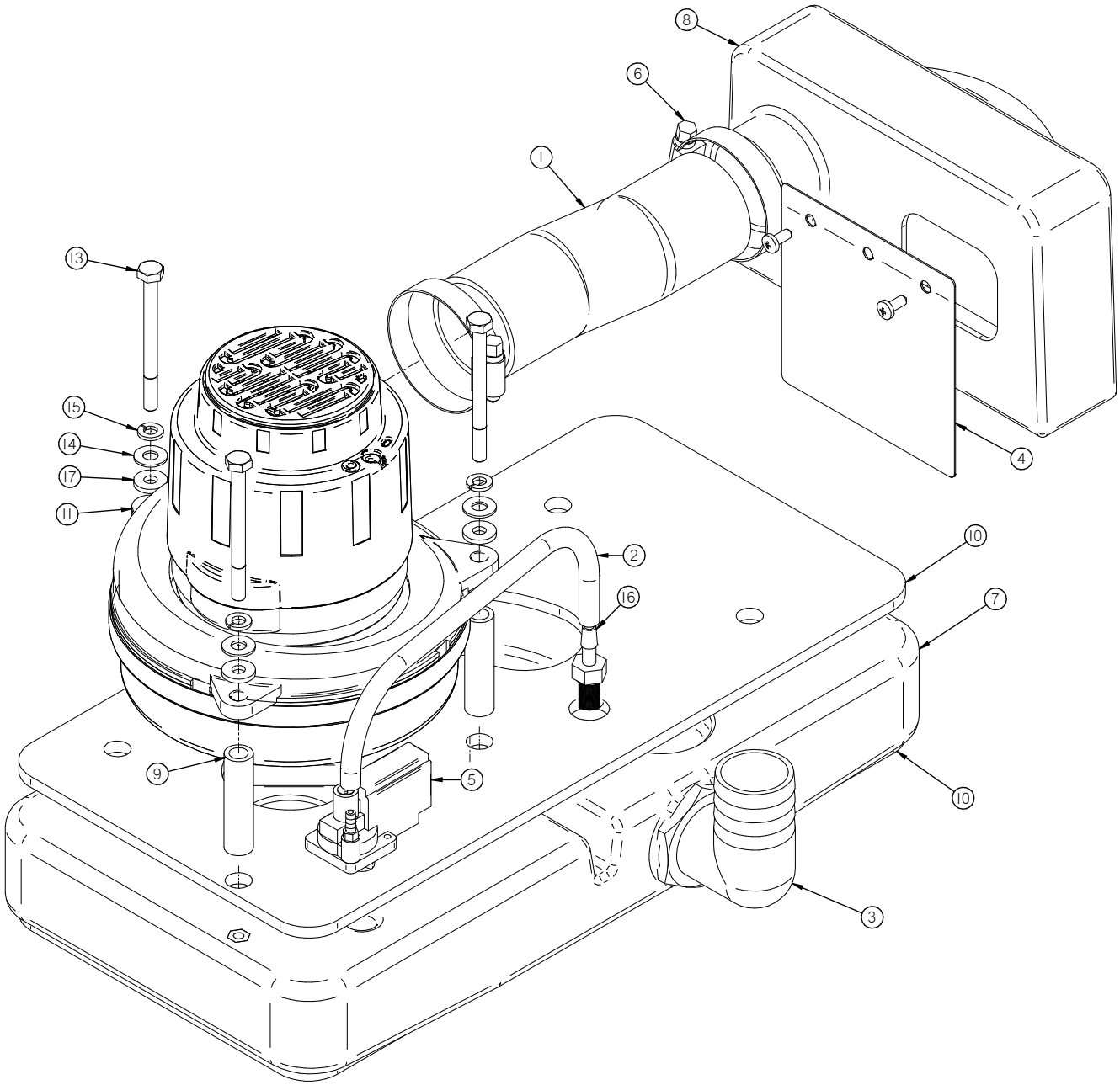

Item	Part No.	Part Description	Qty.
1		2" HOSE	1
2		VAC SWITCH HOSE	1
3		1-1/2 NPT X 1-1/2" BARBED ELBOW	1
4	175-1029	TANK BACK SPLASH	1
5	390-2328	SWITCH, VACUUM SHUTOFF	1
6	5-719	CLAMP 1 9/16 - 2 1/2 " SS	2
7	650-1146	GTR VAC BOX	1
8	650-1148	GTR VAC MUFFLER WALL	1
9	650-2600	SPACER, 2-1/8" LG	3
10	650-3001	VAC MOTOR GASKET	2
11	650-5250	36 V VAC MOTOR	1
12*	H-175216	PPH SMS #10 X 1/2" SBO	2
13	H-70015	HCS 1/4"- 20 X 3.0" SS	3
14	H-71013	FW 1/4 ID X 5/8 OD SS	3
15	H-71063	LW 1/4" SS	3
16	M-5463K439	.25 NPT X .125 BARB	1
17	M-90130A029	.25" NEOPRENE WASHER	3

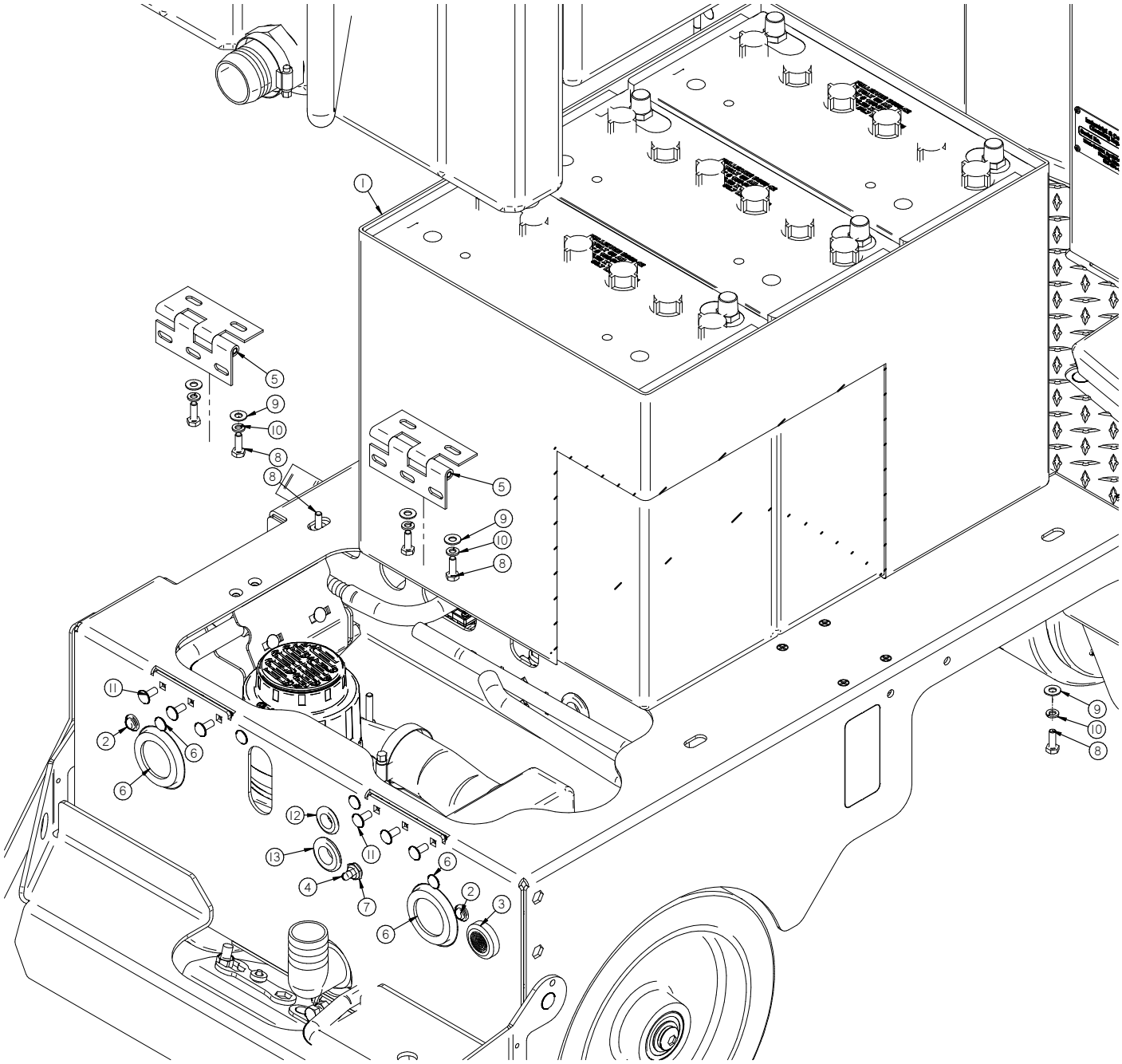

Item	Part No.	Part Description	Qty.
1	270-0001	36V. (3) 12V. BATTERY TRAY	1
2	290-2310	FULL RECOVERY (RED)	2
3	370-2930	ALARM (91 dPa)	1
4	370-8920	TOGGLE, ON-OFF SPST	1
5	500-1220	4" SS HINGE	2
6	500-2910	HEAD LIGHT	2
7	H-11199	PROTECTIVE BOOT, TOGGLE SWITCH, (BLUE)	1
8	H-70003	HCS 1/4"-20 X 3/4" SS	7
9	H-71013	FW 1/4 ID X 5/8 OD SS	7
10	H-71063	LW 1/4" SS	6

Item	Part No.	Part Description	Qty.
11	H-74418	CB 1/4"- 20 X 5/8" S/S	2
12	M-9307K65	GROMMET .625 ID X 1.125 OD HOLE .125 THICK PANEL	1
13	M-9307K82	GROMMET, 3/4" ID X 1-3/8" OD BUNA-N	1

WHICH BATTERY CHARGER TO USE WITH BATTERY SELECTION		
Battery Part Number & Description	**Console Charger / North America**	**Onboard Charger / North America / International**
ST ONLY 253-2110 (12V / 175AH - WET)	250-2540 (36VDC / 25A)	500-2460 (36VDC / 27A)
ST & HD 270-2110 (12V / 225AH - WET)	250-2540 (36VDC / 25A)	500-2460 (36VDC / 27A)
ST & HD 500-2120 (12V / 200AH - AGM)	370-2540 (36VDC / 30A)	370-2460 (36VDC / 33A)

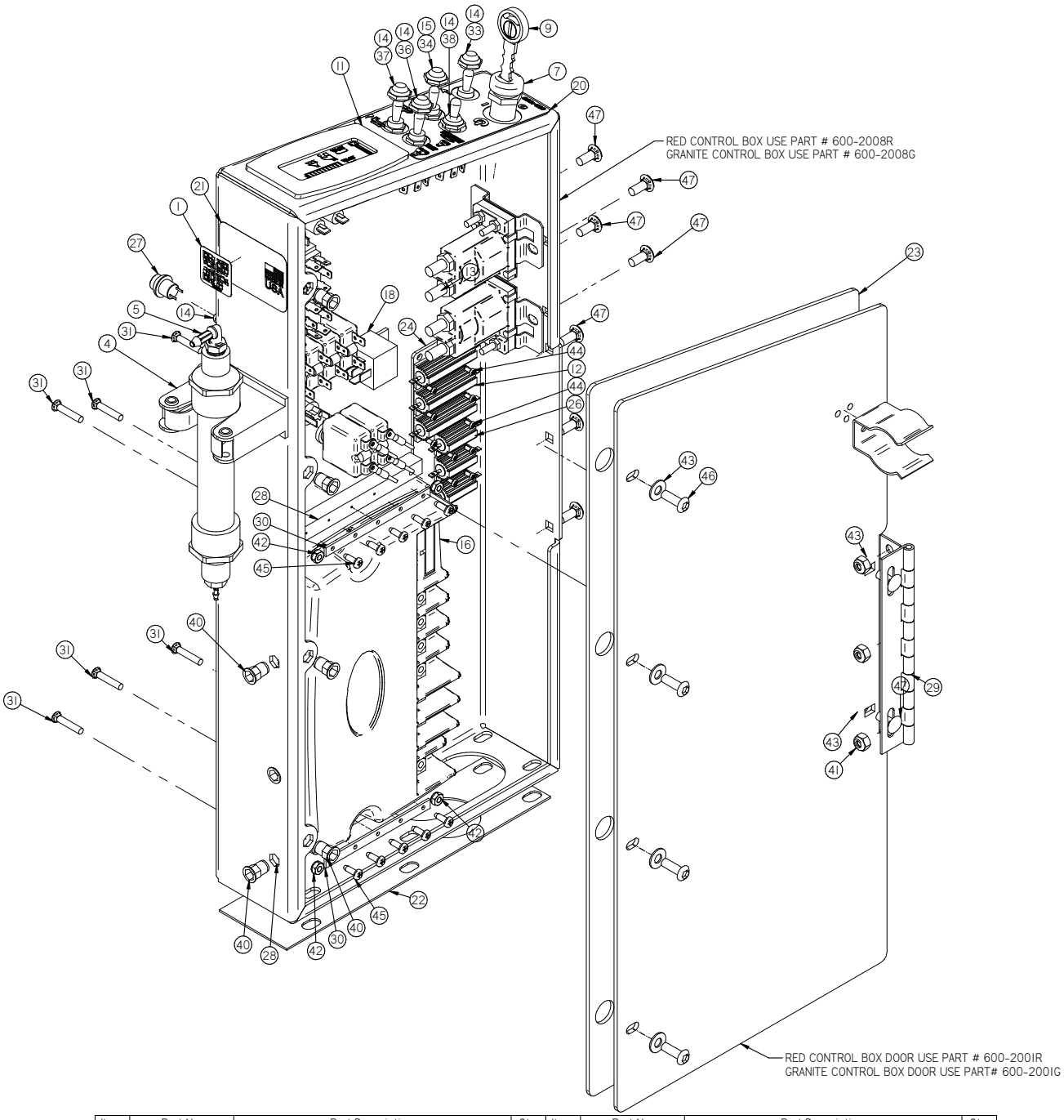

Item	Part No.	Part Description	Qty.	Item	Part No.	Part Description	Qty.
1		QR sticker	1	25	650-2019	CONTROL PANEL STICKER, FRONT	1
2		7-837.asm	1	26	650-9581	RESISTER	3
3		4-284.asm	3	27	7-229D	PUSH BUTTON SWITCH	1
4	123-8860	HOSE BRACKET HOLDER	1	28	7-287	BUSS BAR UHMW	2
5	123-9134	AIR DRYER	1	29	8-180	HINGE, 6-7/8" S/S	1
6	290-2330	RED LIGHT	2	30	E-5HBB	5 HOLE BUSS BAR	2
7	290-234	KEY SWITCH (WITH KEY)	3	31	H-0172521	CB #10-32 X 1" SS	6
8	290-2340	GREEN LIGHT	1	32	H-11195	PROTECTIVE BOOT, TOGGLE SWITCH, (WHITE)	2
9	290-234A	KEY SET (REPLACE)	1	33	H-11196	PROTECTIVE BOOT, TOGGLE SWITCH, (RED)	1
10	290-2350	YELLOW LIGHT	2	34	H-11197	PROTECTIVE BOOT, TOGGLE SWITCH, (YELLOW)	1
11	290-2891	LCD SCREEN	1	35	H-11198	PROTECTIVE BOOT, TOGGLE SWITCH, (GREEN)	2
12	290-9581	RESISTER	3	36	H-11199	PROTECTIVE BOOT, TOGGLE SWITCH, (BLUE)	1
13	370-2331	RELAY, 36V, SMALL W/FLAT MTG PLATE	2	37	H-11200	PROTECTIVE BOOT, TOGGLE SWITCH, (BLACK)	1
14	370-8210	SWITCH, TOGGLE, ON/ON (DPDT)	10	38	H-11201	PROTECTIVE BOOT, TOGGLE SWITCH, (GRAY)	1
15	370-8920	TOGGLE, ON-OFF SPST	1	39	H-11202	PROTECTIVE BOOT, TOGGLE SWITCH, (ORANGE)	2
16	390-2899	CONTROLLER V4	1	40	H-250HCN	HCN 1/4"-20	7
17	390-9615.asm		2	41	H-70860	NYLOK 1/4"- 20 SS	5
18	5-293	15 AMP RELAY	1	42	H-70922	KN #8-32	4
19*	5-886	WAND CLIP	1	43	H-71013	FW 1/4 ID X 5/8 OD SS	6
20	505-1500	CONTROL PANEL STICKER, TOP	1	44	H-72486	PPH #4-40 X 1/2" S/S	12
21	505-1500	METER STICKER	1	45	H-72914	PPH SMS #8 X 1/2"	10
22	600-2004	CENTRAL COMMAND DUST CURTAIN	1	46	H-73754	BHSCS 1/4 - 20 X 3/4" SS	4
23	600-2005	ACCESS COVER GASKET	1	47	H-74418	CB 1/4"- 20 X 5/8" S/S	9
24	650-2007	RESISTER PLATE	1				

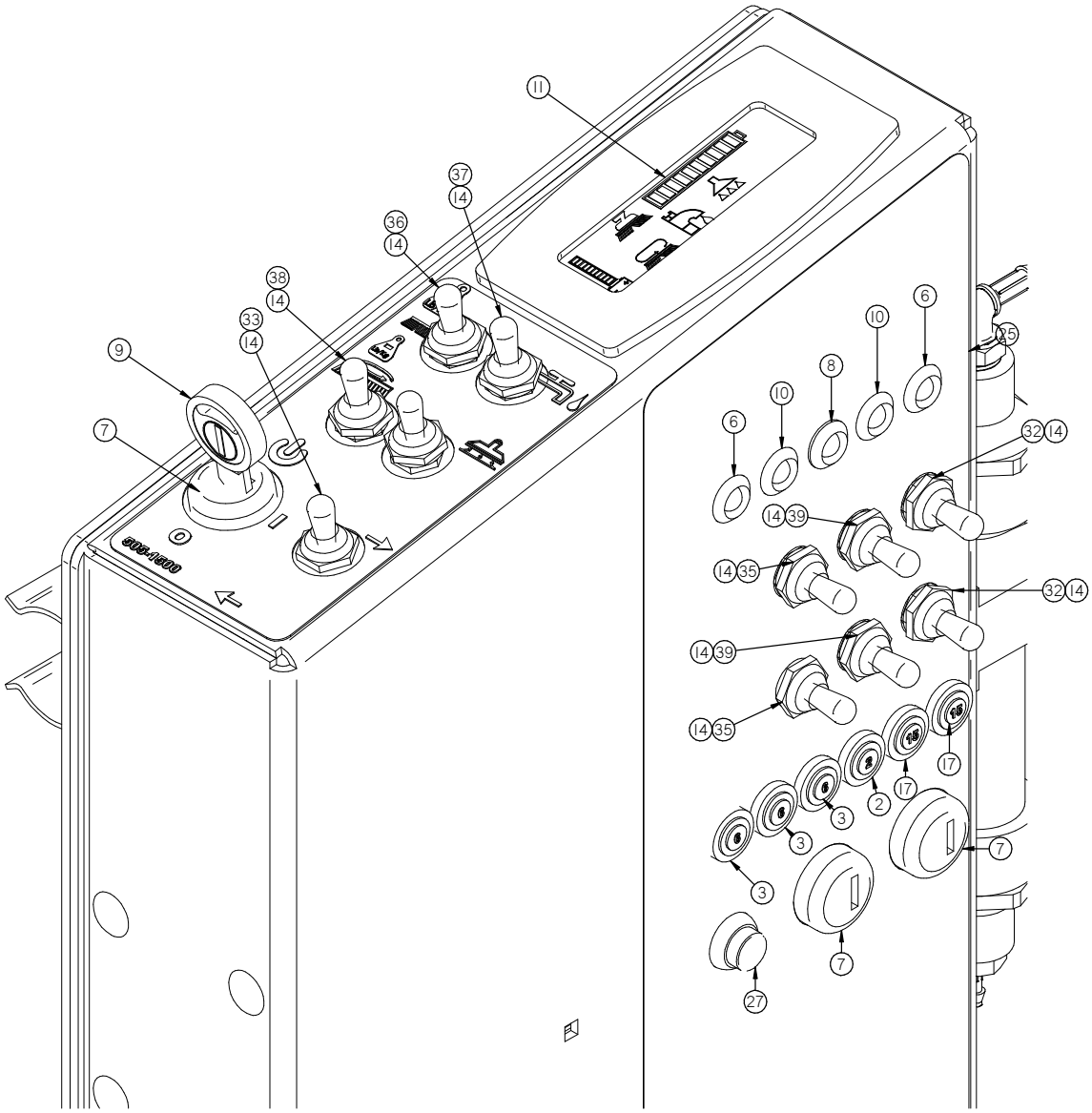

Item	Part No.	Part Description	Qty.
1		QR sticker	1
2		7-837.asm	1
3		4-284.asm	3
4*	123-8860	HOSE BRACKET HOLDER	1
5*	123-9134	AIR DRYER	1
6	290-2330	RED LIGHT	2
7	290-234	KEY SWITCH (WITH KEY)	3
8	290-2340	GREEN LIGHT	1
9	290-234A	KEY SET (REPLACE)	1
10	290-2350	YELLOW LIGHT	2
11	290-2891	LCD SCREEN	1
12	290-9581	RESISTER	3
13	370-2331	RELAY, 36V, SMALL W/FLAT MTG PLATE	2
14	370-8210	SWITCH, TOGGLE, ON/ON (DPDT)	10
15	370-8920	TOGGLE, ON-OFF SPST	1
16	390-2899	CONTROLLER V4	1
17	390-9615.asm		2
18	5-293	15 AMP RELAY	1
19*	5-886	WAND CLIP	1
20	505-1500	CONTROL PANEL STICKER, TOP	1
21	505-1500	METER STICKER	1
22	600-2004	CENTRAL COMMAND DUST CURTAIN	1

Item	Part No.	Part Description	Qty.
23	600-2005	ACCESS COVER GASKET	1
24	650-2007	RESISTER PLATE	1
25	650-2019	CONTROL PANEL STICKER, FRONT	1
26	650-9581	RESISTER	3
27	7-229D	PUSH BUTTON SWITCH	1
28	7-287	BUSS BAR UHMW	2
29	8-180	HINGE, 6-7/8" S/S	1
30	E-5HBB	5 HOLE BUSS BAR	2
31	H-017252I	CB #10-32 X 1" SS	6
32	H-11195	PROTECTIVE BOOT, TOGGLE SWITCH, (WHITE)	2
33	H-11196	PROTECTIVE BOOT, TOGGLE SWITCH, (RED)	1
34	H-11197	PROTECTIVE BOOT, TOGGLE SWITCH, (YELLOW)	1
35	H-11198	PROTECTIVE BOOT, TOGGLE SWITCH, (GREEN)	2
36	H-11199	PROTECTIVE BOOT, TOGGLE SWITCH, (BLUE)	1
37	H-11200	PROTECTIVE BOOT, TOGGLE SWITCH, (BLACK)	1
38	H-11201	PROTECTIVE BOOT, TOGGLE SWITCH, (GRAY)	1
39	H-11202	PROTECTIVE BOOT, TOGGLE SWITCH, (ORANGE)	2
40	H-250HCN	HCN 1/4"-20	7
41	H-70860	NYLOK 1/4"- 20 SS	5
42	H-70922	KN #8-32	4
43	H-71013	FW 1/4 ID X 5/8 OD SS	6
44	H-72486	PPH #4-40 X 1/2" S/S	12
45	H-72914	PPH SMS #8 X 1/2"	10
46	H-73754	BHSCS 1/4 - 20 X 3/4" SS	4
47	H-74418	CB 1/4"- 20 X 5/8" S/S	9

Steering Column

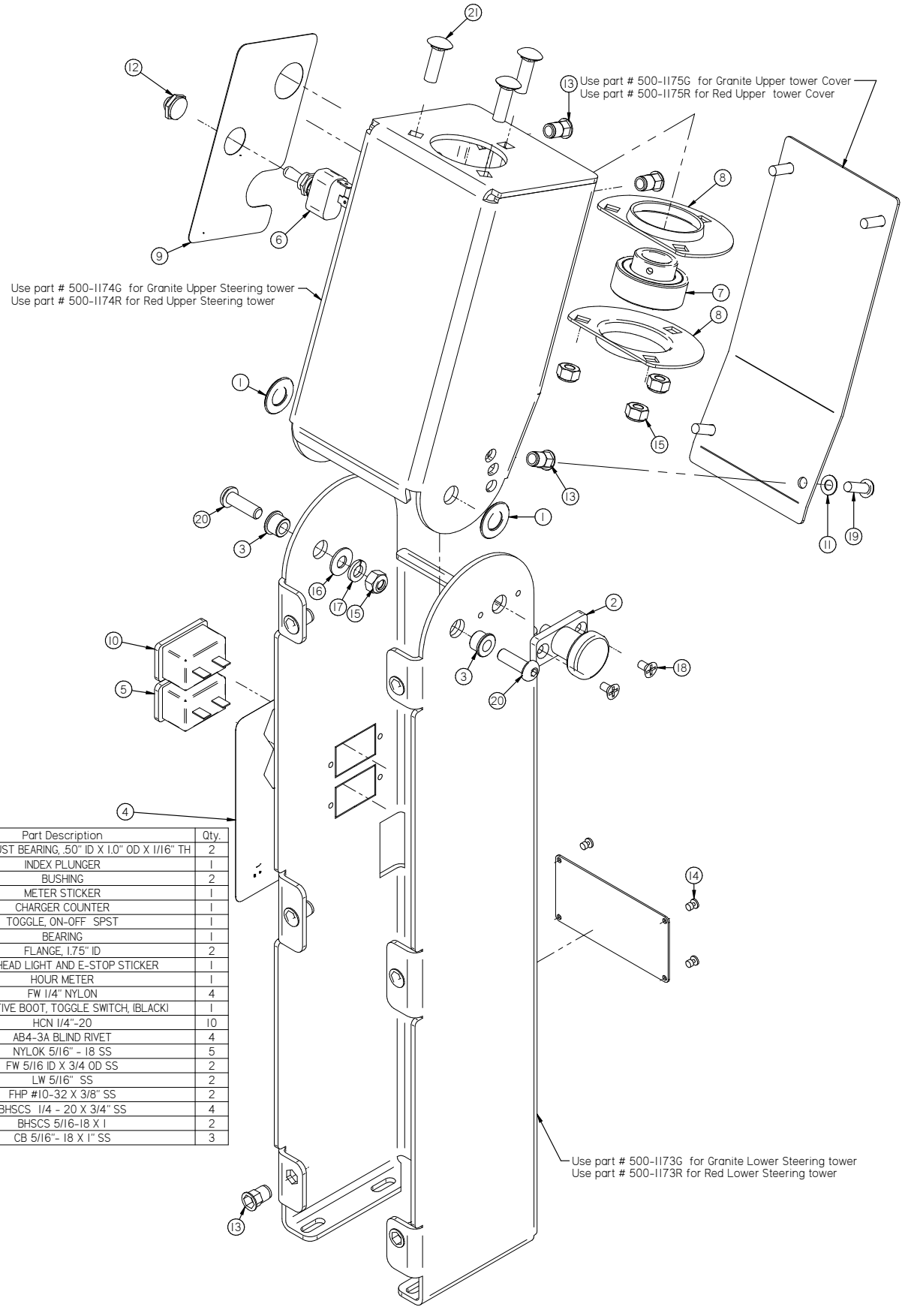

Item	Part No.	Part Description	Qty.
1	290-1247	BRONZE THRUST BEARING, .50" ID X 1.0" OD X 1/16" TH	2
2	290-7050	INDEX PLUNGER	1
3	370-1245	BUSHING	2
4	370-7204	METER STICKER	1
5	370-8261	CHARGER COUNTER	1
6	370-8920	TOGGLE, ON-OFF SPST	1
7	4-352	BEARING	1
8	500-3640	FLANGE, 1.75" ID	2
9	600-1503	HORN HEAD LIGHT AND E-STOP STICKER	1
10	8-262	HOUR METER	1
11	H-00282	FW 1/4" NYLON	4
12	H-11200	PROTECTIVE BOOT, TOGGLE SWITCH, (BLACK)	1
13	H-250HCN	HCN 1/4"-20	10
14	H-41007	AB4-3A BLIND RIVET	4
15	H-70861	NYLOK 5/16" - 18 SS	5
16	H-71015	FW 5/16 ID X 3/4 OD SS	2
17	H-71065	LW 5/16" SS	2
18	H-72681	FHP #10-32 X 3/8" SS	2
19	H-73754	BHSCS 1/4 - 20 X 3/4" SS	4
20	H-73780	BHSCS 5/16-18 X 1	2
21	H-74430	CB 5/16"- 18 X 1" SS	3

Attaching Steering Column & Central Command

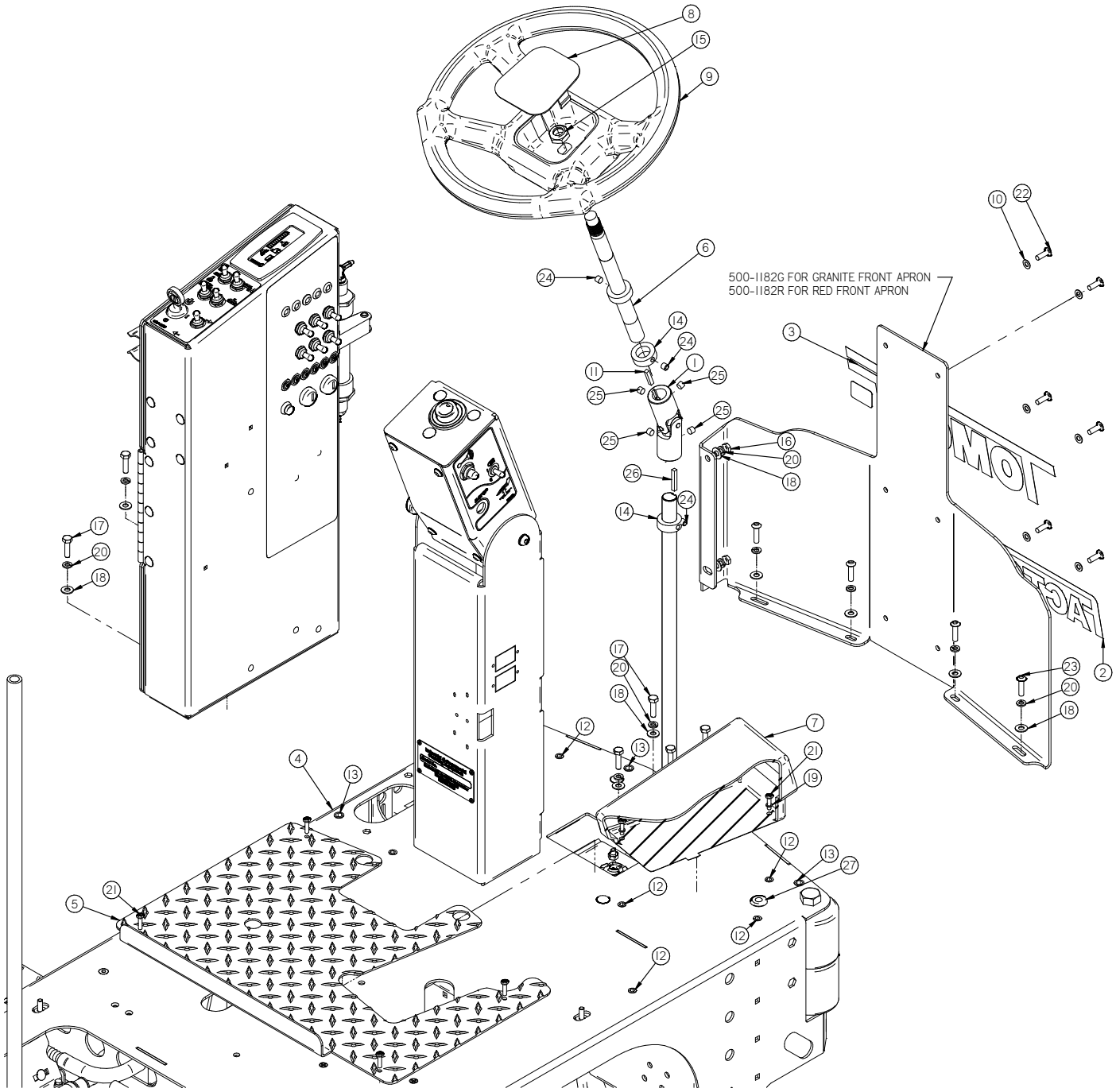

Item	Part No.	Part Description	Qty.	Item	Part No.	Part Description	Qty.
1	290-7110	U-JOINT	1	15	H-37038	JNYL 5/8"- 11	1
2	370-7201	FACTORY CAT STICKER	1	16	H-70003	HCS 1/4"-20 X 3/4" SS	5
3	370-7202	TOMCAT STICKER	1	17	H-70005	HCS 1/4"- 20 X 1" SS	3
4	500-1000	MAIN FRAME	1	18	H-71013	FW 1/4 ID X 5/8 OD SS	12
5	500-1612	NON SKID FLOOR PLATE	1	19	H-71059	LW #10, SS	1
6	500-7090	STEERING SHAFT, UPPER	1	20	H-71063	LW 1/4" SS	10
7	8-290	FOOT PEDAL	1	21	H-72534	PPH #10-32 X 3/4" S/S	2
8	8-701A	STEERING COVER	1	22	H-73754	BHSCS 1/4 - 20 X 3/4" SS	6
9	8-703	STEERING WHEEL	1	23	H-73755	BHSCS 1/4 - 20 X 1" SS	4
10	H-00282	FW 1/4" NYLON	6	24	H-81983	5/16" X 1/4" KURL SET SCREW	3
11	H-01125	3/16" X 1" KEY	1	25	H-82022	5/16-24" X 1/4" KURL SET SCREW	4
12	H-02309	HCN #10-32, LG CRIMP	5	26	H-K14320	3/16" X 1 1/4" KEY	1
13	H-250HCN	HCN 1/4"-20	3	27	M-9307K23	GROMMET .625 DIAMETER HOLE .125 THICK PANEL	1
14	H-33376	SHAFT COLLAR, 3/4" ID X 9/16 LG	3				

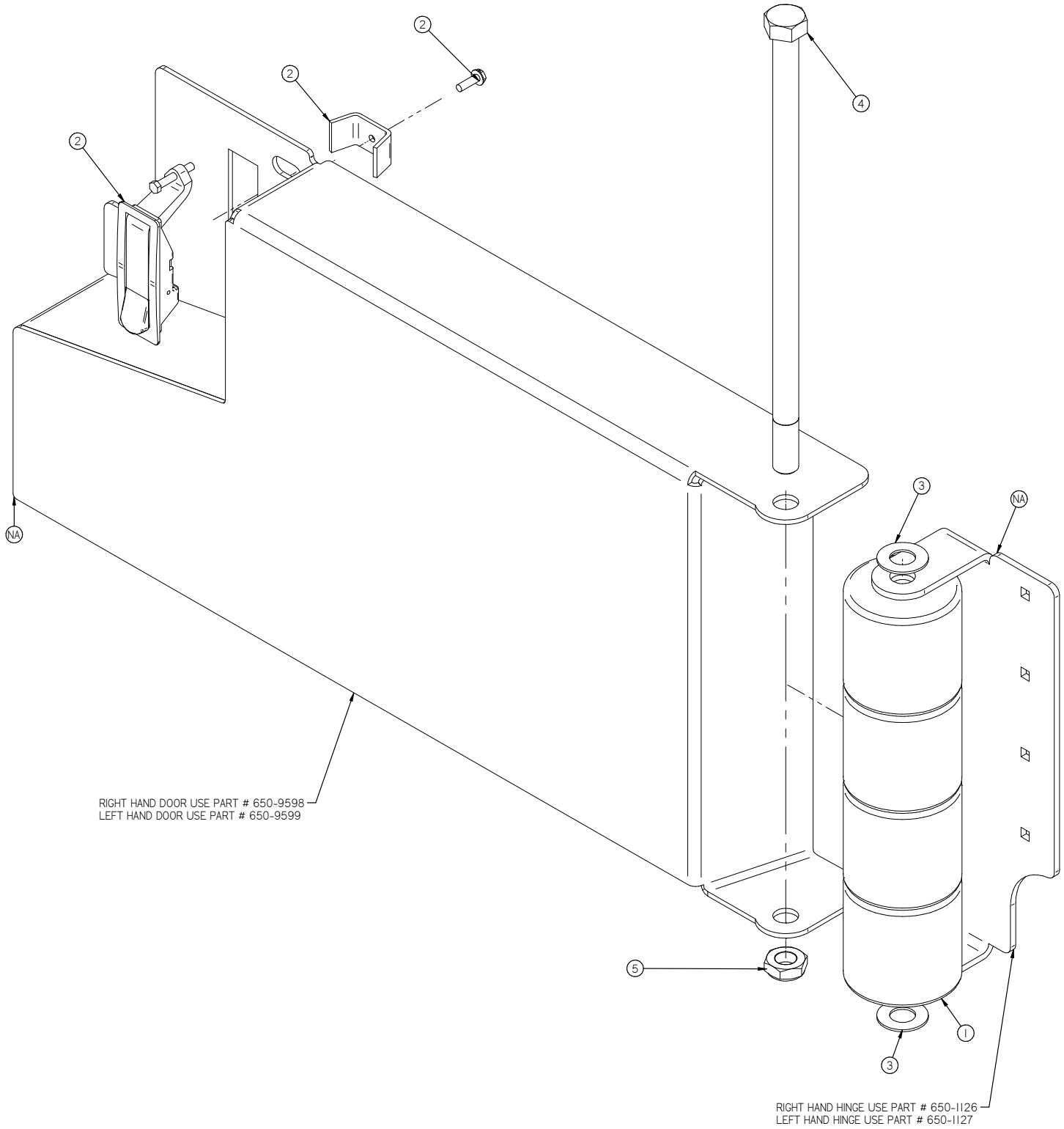

Item	Part No.	Part Description	Qty.
1	21-1127	ROLLER	4
2	5-130	DOOR LATCH	1
3	H-00279	FW 5/8" PVC	2
4	H-13337	HB 5/8"- 11 X 13"	1
5	H-37038	JNYL 5/8"- 11	1

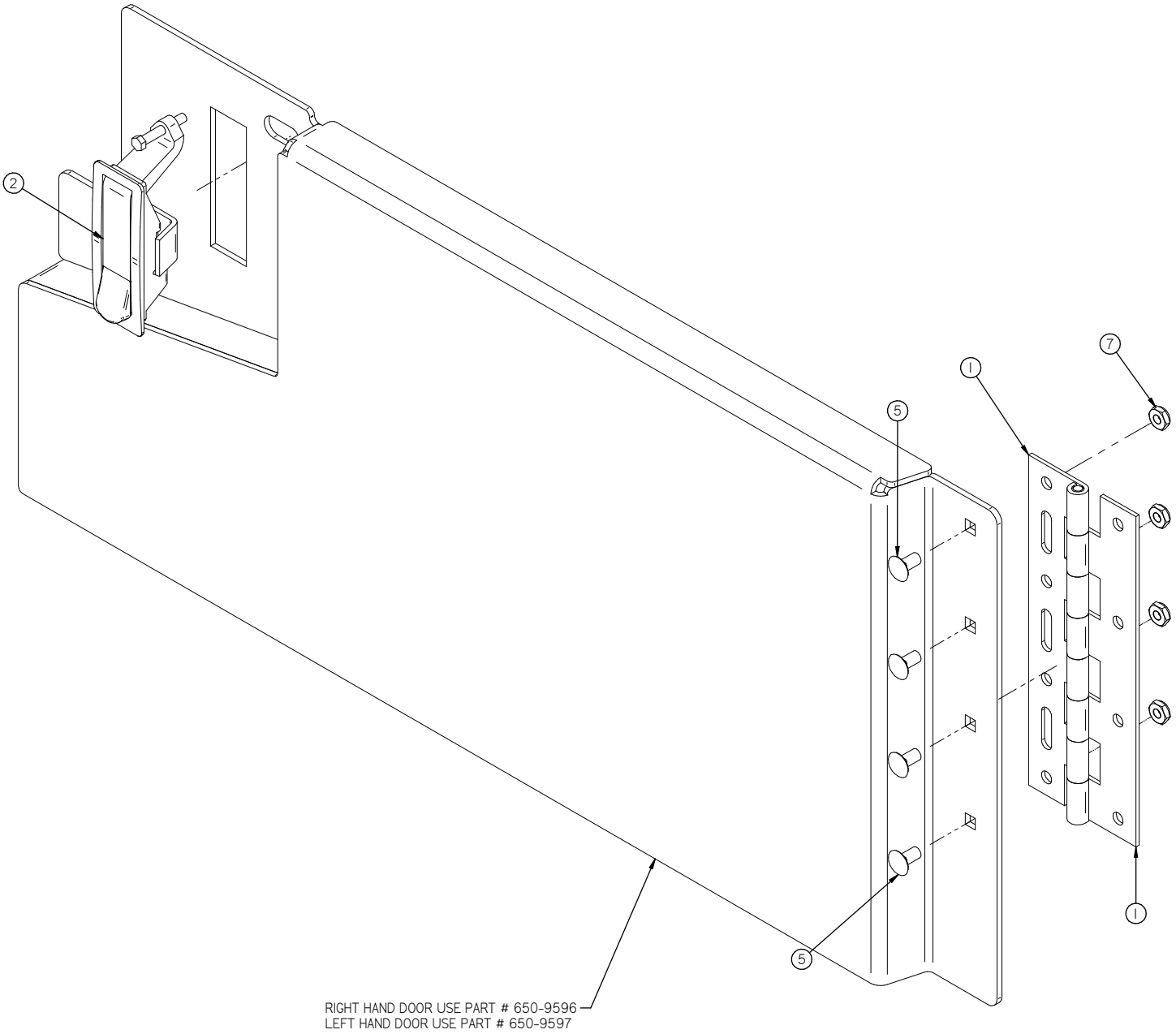

Item	Part No.	Part Description	Qty.
1	5-122	8" SS HINGE	1
2	5-130	DOOR LATCH	1
3*	H-37708	1/4-20 LC ACORN NUT	4
4*	H-71063	LW 1/4" SS	4
5	H-74417	CB 1/4"- 20 X .5" SS	4
6*	H-74418	CB 1/4"- 20 X 5/8" S/S	4
7	H-NJ04C	JNYL 1/4" - 20 SS	4

ROUND DISK BRUSHES:

NOTICE

The ## in Disk Column Denotes Desk Pad Size: 13" or 14"

BRUSHES	DISK	LEVEL
Super Grit	##-382SS	Very High
Tough Grit	##-382S	High
Midi Grit	##-382C	Medium
Light Grit	##-382PS	Moderate
Poly	##-382P	Light
Nylon	##-382N	Light
Tampico	##-382T	Light
Pad Driver	##-382D	
Diamond Driver	##-382DD	

ROUND DISK PADS:

NOTICE

The ## in Disk Column Denotes Desk Pad Size: 13" or 14"

DISK PADS	DISK	LEVEL	COLOR
Super Black	##-422BB	Very High	Black
Black	##-422B	High	Black
Brown	##-422BR	High	Brown
Green	##-422G	Medium	Green
Blue	##-422BL	Moderate	Blue
Red	##-422R	Moderate	Red
White	##-422W	Light	White

CYLINDRICAL BRUSHES:

BRUSHES	MODEL 25" CYLINDRICAL	MODEL 29" CYLINDRICAL	LEVEL
Tough Grit	236-697S	276-697S	High
Midi Grit	236-697C	276-697C	Medium
Light Grit	236-697PS	276-697PS	Moderate
Fine Grit	236-697F	276-697F	Light
Nylon	236-697N	276-697N	Light
Tampico	236-697T	276-697T	Light

SQUEEGEE BLADE KITS & COMPLETE SQUEEGEE ASSEMBLIES:

SQUEEGEE SIZE	26" DISK	28" DISK	25" CYL	29" CYL	24" EDGE	28" EDGE
30" Squeegee	Standard	Optional	Standard	Optional	Standard	Optional
33" Squeegee	Optional	Standard	Optional	Standard	Optional	Standard
36" Squeegee	Optional	Optional	Optional	Optional	Optional	Optional

SQUEEGEE SIZE	LINATEX BLADE KIT	GUM RUBBER BLADE KIT	URETHANE BLADE KIT	COMPLETE SQUEEGEE ASSEMBLIES
30" Squeegee	30-770L	30-770G	30-770U	30-8180
33" Squeegee	33-770L	33-770G	33-770U	33-8180
36" Squeegee	36-770L	36-770G	36-770U	36-8180

SQUEEGEE MATERIAL:	USED FOR:
LINATEX	Provides best wear and tear resistance. Not designed for use with harsh chemicals.
URETHANE	Provides best resistance when dealing with harsh chemicals, oils, fuels, etc.
GUM	Provides best drying preformance on rough/grouted floor types by sealing over irregularities. Short life.

NOTICE

Squeegee blade kits include (1) Rear Blade & (1) Front Blade.

NOTICE

Squeegee Assemblies (complete) listed above all come with Linatex blades.

NOTICE

Size is stamped into the top of the painted steel squeegee body on all squeegee's.

HD Model Sticker - Part #: 500-1513

ST Model Sticker - Part #: 500-1512

TOMCAT®

Front Tomcat Sticker Part #: 370-7202

Sticker Pack - Part #: 500-2020

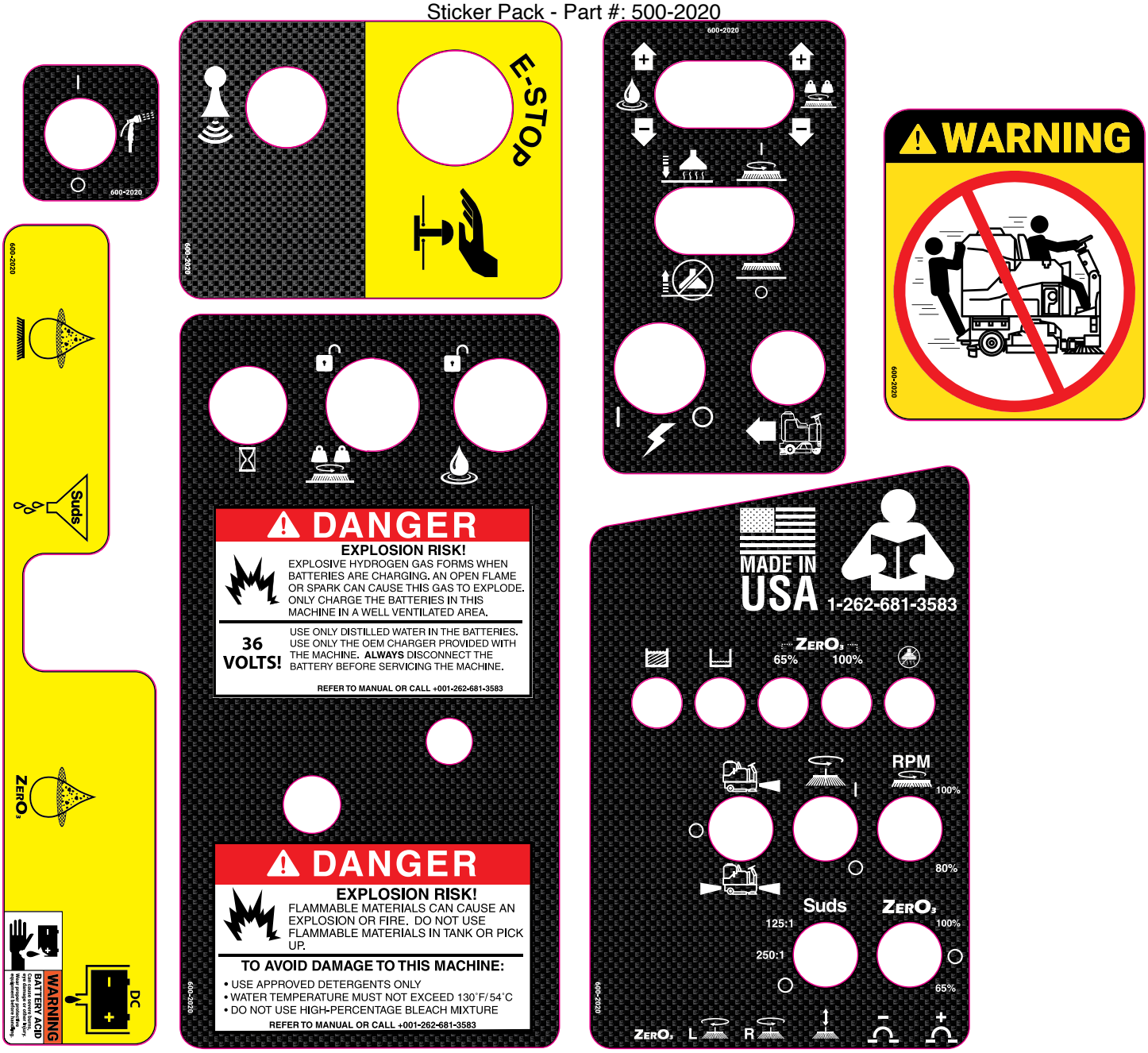

BLANK

THIS PAGE WAS INTENTIONALLY LEFT BLANK

TOMCAT®

1711 South Street
Racine, WI 53404
www.tomcatequip.com
Tel. US: 800-450-9824
Tel. Int: (001) 262-681-6470

© RPS Corporation 2020